NO. 81 NOTES FROM THE SHOP $3.95

Woodsmith®

No. 81 June, 1992

Woodsmith®

Editor Donald B. Peschke
Managing Editor Douglas L. Hicks
Assistant Editors James M. Dolan, Gordon Gaippe, Philip A. Totten

Creative Director Ted Kralicek
Art Director Rod Stoakes
Senior Illustrators David Kreyling, Chris Glowacki
Illustrators Dirk Ver Steeg, Cinda Shambaugh
Contributing Illustr. Robert H. Whitmer
Photographer Crayola England
Design Director Ken Munkel
Asst. Designer Jan Hale Svec
Shop Manager Steve Curtis

Circulation Director Liz Bredeson
Subscription Manager Sandy Baum
Circulation Analyst Jim Woodson
Newsstand Sales Kent A. Buckton

CORPORATE SERVICES
Controller Paul E. Gray
Accounting Linda O'Rourke
Bookkeeping Julianne Spears
Network Administrator Douglas M. Lidster
Administrative Assts. Cheryl A. Scott, Julia Fish
Building Maintenance Ken Griffith, Archie Krause

WOODSMITH SOURCEBOOK
Marketing Director Robert Murry
Art Director Cindy Jackson
Customer Service Mgr. Laura McNelly
Project Supplies Leslie Ann Gearhart, Linda Jones
Technical Support Jonathan Garbison
Advertising Jean Myers
Systems Operator Linda Morrow
Receptionist Keri Lee

CUSTOMER SERVICE
Jennie Enos (Supervisor), Marci Nelson, Jeff Janes, Joy Johnson, Sara Johnson, Ami Blanshan

SHIPPING DEPARTMENT
Jerry Carson (Supervisor), Gloria Sheehan, Ronald Long, Donnie McVey, Chuck Carlson

STORE MANAGERS
Des Moines, IA Kent Welsh
Berkeley, CA Michael DeHaven

Woodsmith® (ISSN 0164-4114) is published bimonthly (Feb., April, June, Aug., Oct., Dec.) by Woodsmith Corporation, 2200 Grand Ave., Des Moines, IA 50312. Printed in U.S.A.
Woodsmith® is a registered trademark of Woodsmith Corp. Copyright© **1992** Woodsmith Corporation. All rights reserved.
Subscriptions: Single copy: $3.95. One year subscription (6 issues), $17.95. Two years (12 issues), $31.95. (Canada/Foreign $21.95 per year, U.S. funds.)
Second Class Postage Paid at Des Moines, IA and at additional offices.
Postmaster: Send change of address to *Woodsmith*, Box 10718, Des Moines, IA 50350.
Subscription Questions? Call 1-800-333-5075, 8:00 am to 5:00 pm, Central Time, weekdays.

EDITOR'S COLUMN

Sawdust

If I were to say the word dovetails, it would conjure up all sorts of mental images. Probably the last image on the list would be that of ancient Egypt.

I had the chance to go through the Metropolitan Musuem of Art in New York a couple of years ago. One of my favorite pastimes is studying the sculpture, artwork and architecture of ancient Egypt, Greece, and Rome. The Met has a huge section on ancient Egypt. I spent hours wandering through it.

As I was looking at a collection of wooden coffins from ancient Egypt, you can imagine the smile that crossed my face when I noticed some were joined with dovetails. There's a tendency to think of dovetails as old . . . the kind of old that means 1700's or 1800's. Not thousands of years B.C.

Granted, the ancient Egyptians used fairly basic dovetail joinery. But I suppose the process they used to lay out and cut dovetails was not much different than how we do it today. Nothing new under the sun. Or so I thought.

When we began work on the article showing how to cut dovetails by hand for this issue, I thought the generally accepted method was pretty close to the way I had done it for years. But I learned a couple new techniques this time around.

First, I discovered how valuable a guide fence can be when chopping out the pins and tails along the baseline (page 29).

But the most important change came from Ken Munkel, our Design Director. It has to do with how the tails are laid out using the pins. I had not seen his method before, but it does make for a more accurate layout. (See Figs. 1, 2, 3, page 27.)

For those who really get into details, the old method has you cut the pins first, and then you hold the ends of the pins perpendicular to the board for the tails to lay them out. The problem here is that you're laying out the tails on the inside of the joint.

The new method we're showing has you lay out the outside of the joint. This should yield better results because you're laying out and then cutting on the outside of the joint — the part you see.

HARDWARE. Of all the tools and gadgets available to woodworkers, hardware is only mildly interesting to me. However, my opinion changes quickly when I find a clever piece of hardware that solves a sticky design problem.

That was the case for the Entertainment Center in this issue. The whole idea behind a cabinet with a TV in it is to open the doors and get them out of the way so you have an unobstructed view. That requires special hardware.

The hardware we chose is one of a variety of European-style concealed hinges. These hinges differ from typical butt hinges in two important ways.

First, there's none of the hassle of carefully cutting out a hinge mortise. Instead, these hinges mount in a 1⅜"-dia. hole. Bore the hole, press in the hinge.

Second, concealed hinges are designed so you can adjust the position of the door in the cabinet after it's mounted. By just turning some adjusting screws, you can move the door in and out, up and down, left and right. It makes life a lot easier.

There is a third reason. This kind of hardware has a version that includes a sliding track for mounting a door so it can hinge open and slide back into the cabinet. That proved to be the perfect solution for the Entertainment Center (page 15).

NEW FACES. It's not easy to teach an old dog new tricks. But that's the challenge facing my new assistant, Julia Fish. She has agreed to help me get (and stay) organized. A formidable task, considering the piles of confusion in my office.

Julia is making steady progress, mostly as a result of her unwavering patience. I'm grateful she's here, and soon I'll be wondering how I ever got along without her help.

BERKELEY STORE. The persistent recession has forced us to close our store in Berkeley, California. For the past five years, we have enjoyed serving the woodworkers in the San Francisco area.

Michael DeHaven, his chief assistant Lenny Johnson, and all the guys in the store did a great job of working with customers to provide them with the woodworking tools and supplies they wanted.

The exceptional part of their service was the wealth of information they were able to provide about literally thousands of tools and products in the store.

I will miss working with them. And we will miss all the friends we made through the Berkeley store.

Don

A LOOK INSIDE

Contents

Tips & Techniques 4 *Five great tips. 1) Height Gauge. 2) Tool Stand. 3) Raised Panel Jig. Plus, two useful Quick Tips.*

Entertainment Center 6 *The hardware for the doors on this cabinet lets you open the doors and slide them back into the cabinet, beside the TV.*

Concealed Hinges 14 *These European-style concealed hinges are easy to install — and with just a turn of a screw, they make it easy to perfectly position the doors.*

Shop Notes 16 *1) Tips for Squaring a Cabinet. 2) Routing Recesses for Shelf Pins. 3) Jig for Mortising Miters. 4) Trimming off Edging Strips.*

Stationery Box 18 *This weekend project has traditional hand-cut dovetails. It also features a unique joint for the raised panel top.*

Hand-Cut Dovetails 24 *Before you pick up a saw to cut dovetails, you have to start with the correct layout procedure.*

Dovetail Pins & Tails 26 *Step-by-step procedures showing how to lay out, cut, and fit the interlocking parts of a dovetail joint.*

Dovetail Jigs & Tips 28 *Three jigs and a tip to help you produce tight-fitting dovetails.*

Talking Shop 30 *Our favorite way to true up an aluminum oxide grinding wheel. Also, an interesting story from a shop teacher about installing hinges.*

Sources 31 *Hardware and supplies needed for the projects in this issue.*

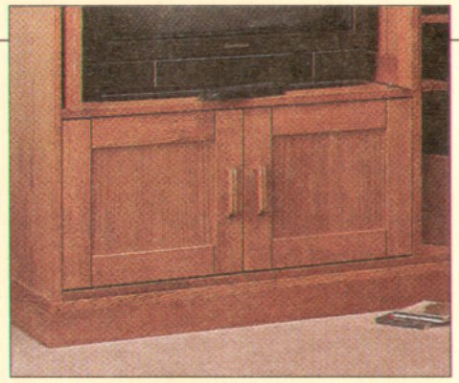

Entertainment Center *page 6*

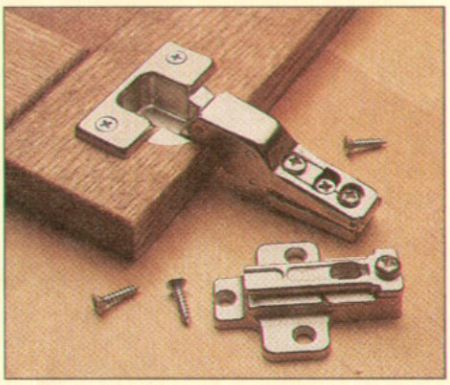

Concealed Hinges *page 14*

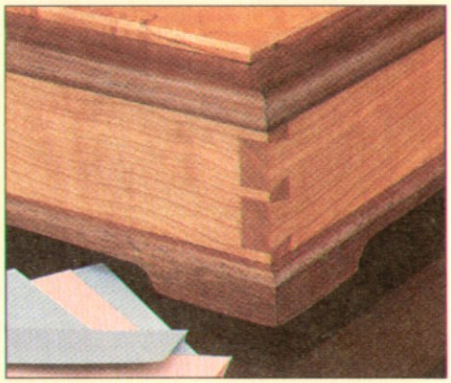

Stationery Box *page 18*

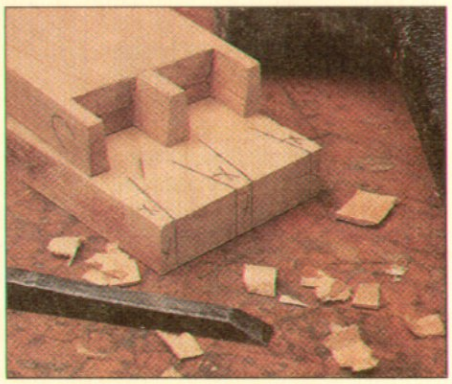

Hand-Cut Dovetails *page 24*

Tips & Techniques

HEIGHT GAUGE

■ What can you do with a piece from a broken rule? I used it to make a gauge for setting the depth of cut of my table saw blade and router bits.

The gauge is made from a block of wood with a hole in it. Bore a 1"-dia. hole through a block of hardwood. Be sure to drill across the grain.

Now cut a 2"-high slot through the middle of the block (and hole) on the table saw, see Fig. 1. I made this slot slightly wider than the thickness of my saw blades. (For appearance, I cut off the top corners of the block.)

The second piece needed is a dowel with the rule attached. To mount the rule, sand a 3"-long "flat" at one end of a dowel. Then attach a section of the rule with double-sided carpet tape, see Fig. 1.

To keep the dowel from falling through the block, I installed a ¼" keeper dowel just above the rule, see Fig. 1.

To use the gauge, set it down over the top of a saw blade or router bit. This will push the dowel up so it sticks out the top of the block. As long as the height of the block and the length of the rule are the same, the depth of cut can be read off the rule at the top edge of the block, see Fig. 2.

John R. Todd, Sr.
Holly Springs, N. Carolina

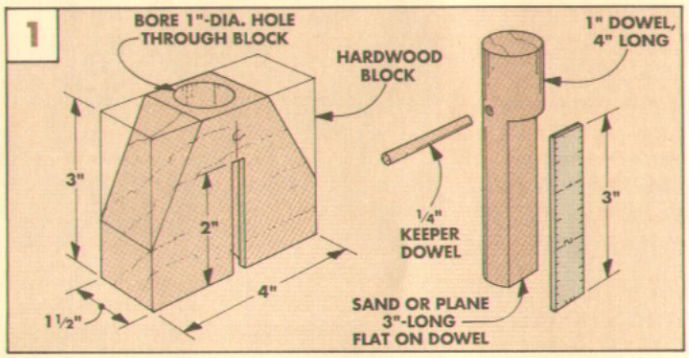

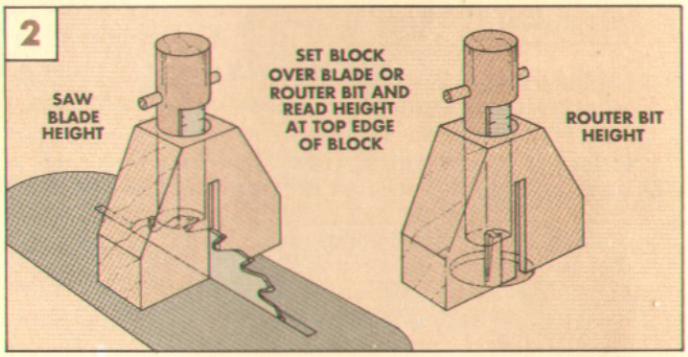

TOOL STAND

■ The shop cabinet plans in *Woodsmith* No. 74 gave me the idea to make a tool stand for my bench top power tools. But I modified the top to accept removable shelves.

(*Editor's Note: Lynn built the* Woodsmith *cabinet, but any similar base would work*).

Now I can attach each power tool to its own shelf, and slide the tool I want to use into the slot in the top. The idea is to add a second top to the cabinet, this one with beveled sides to hold a sliding shelf, refer to Fig. 2.

This double top is built from two layers of ¾" plywood. The top layer is made up of four pieces: a shelf (that a tool is attached to), and three pieces that "surround" the shelf and secure it to the base piece, see Fig. 2.

Start by cutting the plywood for the shelf, beveling the sides to 45°, see Fig. 2. Next, cut the surrounding side pieces, also cutting them with 45° bevels.

To complete the top, glue the surrounding pieces to the ¾" plywood base, see Fig. 2. Use the shelf as a guide to position the surrounding pieces, see Fig. 2a.

Finally, I glued trim around the edges of the top — but the trim on the front isn't glued on. Instead, it's attached with hanger bolts and wing nuts. This way, it locks the shelf into the slot, see Figs. 1 and 2.

Lynn Gaston
Omaha, Nebraska

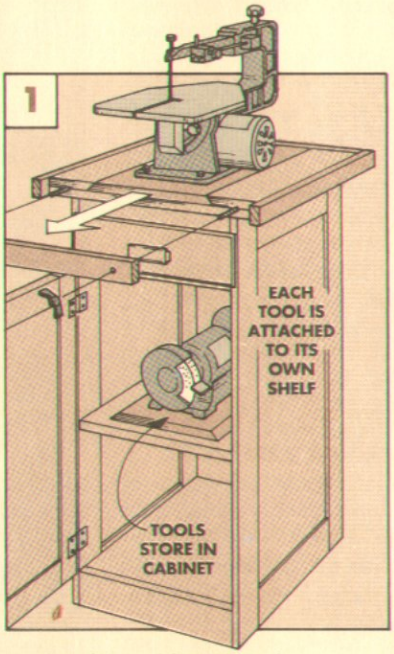

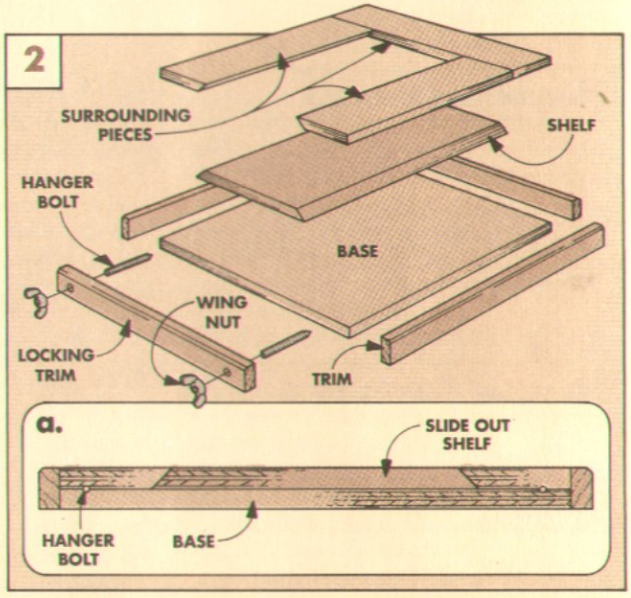

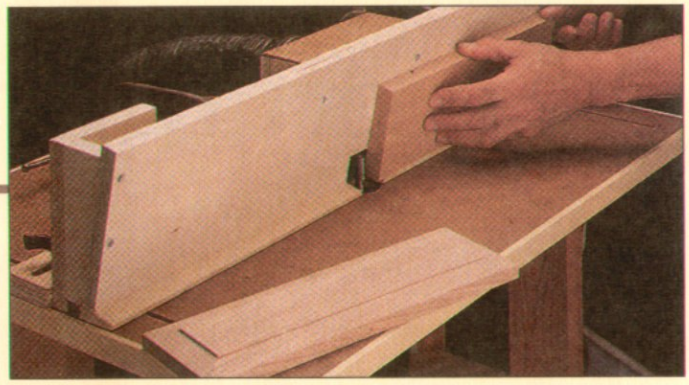

RAISED PANEL JIG

■ I like to make raised panels on the router table rather than on the table saw. To do this, I use a shop-built panel-raising jig and a straight router bit, see photo. (Note: It's similar to a jig in *Woodsmith* No. 53.)

The jig looks unusual because the fence leans forward at 12° over the top of the router bit, refer to Fig. 2a. But, when it's set up this way, most of the bit is safely buried in the fence.

To make a panel-raising jig, cut two pieces of ¾" plywood 6" wide and the same length as your router table fence — one piece is for the fence, the other for the back.

Then make a beveled ledge for the workpiece to ride on as it's pushed past the router bit.

To do this, rip one face of a strip of ¾" stock to 12°. Then glue it to the bottom edge of the fence, see Fig. 1.

Next, I cut a 1½"-square notch centered in the bottom edge of the fence to serve as an opening for the router bit.

The fence is attached to the back with four nearly triangular braces, see Fig. 1. The 12° angle on one side of the braces holds the fence at the correct angle over the router bit.

Finally, I bored a hole in the back between the middle braces to accept my shop vacuum hose, see Figs. 1 and 2. To improve the suction, cap the space between the braces.

To make raised panels, align the jig over a straight bit mounted in the router table, see Fig. 2a. Now, hold the workpiece firmly against the fence and down on the ledge. Then push the workpiece past the bit. To prevent chipout, I rout the bevels in three passes, each one successively deeper.

W. A. Gillon
West Hills, California

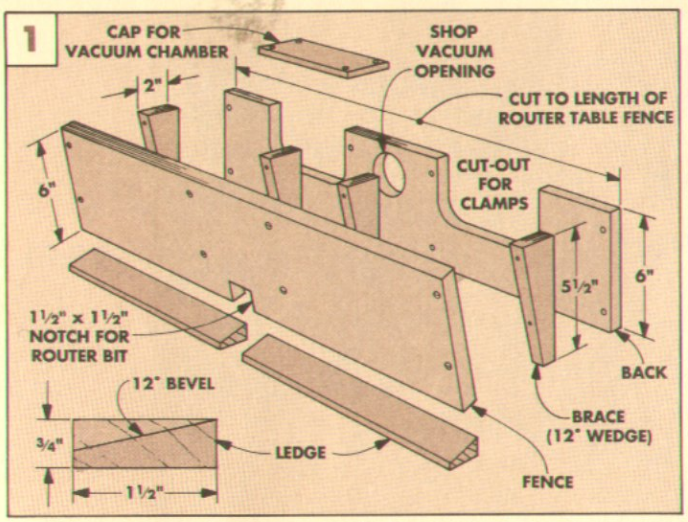

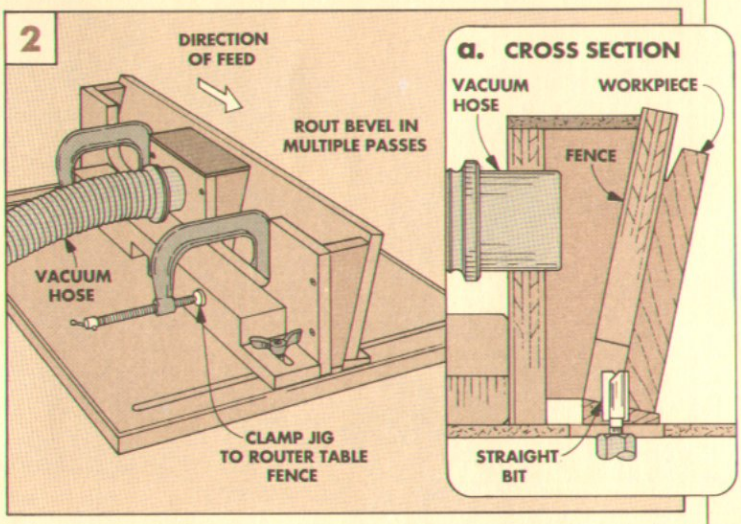

QUICK TIPS

SANDING PILLOW

■ Sanding curved surfaces and inside corners can be difficult. I solved the problem by making a sanding pillow — a soft pad that holds sandpaper and conforms to just about any surface.

To make one, cut a piece of sandpaper the same size as one side of a sandwich bag (the kind with the locking top is best). Next, spray the back of the sandpaper with spray adhesive, and stick it on the bag.

Now put a handful of sawdust into the plastic bag.

This makes a sanding pillow that will adjust to almost any shape. And it also insulates your hand from the heat generated by the sandpaper on the workpiece.

Stanley Hogshead
Pasadena, California

GLUE SCRAPER

■ When wiping glue squeeze-out off a project, I always seemed to smear around more glue than I actually removed. But now, the wiping rag is gone, and in its place is a small plastic clip for closing a bread bag.

These little square or rectangular plastic clips make great little scrapers. They're stiff enough that you can press them firmly against the workpiece. But the plastic isn't hard enough to mar the surface.

They scrape the squeeze-out off a glue line just like a little snowplow.

John Huntington
Wayland, Massachusetts

SEND IN YOUR TIPS

If you would like to share an original tip or idea, just send it to *Woodsmith*, Tips and Techniques, 2200 Grand Ave., Des Moines, Iowa 50312.

We will pay (upon publication) $15 to $100, depending on the published length of the tip. Please include an explanation and a photo or sketch (we'll draw a new one), and a daytime telephone number, in case we have some questions.

Entertainment Center

Doors only have to do two things: open and close . . . unless there's a TV behind them. Then it's nice if they open and slide out of the way. That's why sliding door hardware is essential for this cabinet.

Sliding doors are the key to making this cabinet work. The whole idea is to open the doors (in front of the TV) and slide them back into the cabinet so they're not left hanging open.

The hardware for the sliding doors consists of a two-part hinge system. One part is a concealed hinge that fits into a hole in the back of the door frame. The other part is a sliding track that's screwed inside the cabinet. To hang the door, just mount the two parts and snap them togther.

The best thing about this hardware is that it's adjustable in three directions. If the doors don't line up perfectly the first time, no problem. You can still get them to look right — just by turning a screw. You shouldn't have to move the hinges at all.

SIZE. The overall size of this Entertainment Center is somewhat large, mostly because it's designed to hold a 27" TV. It's also quite deep in order to accommodate a big hump on the back of the TV.

Since the compartments for the stereo equipment don't need that much depth, I made the shelves for these compartments shallower than the TV shelf. This saves on the amount of plywood needed and creates a chamber behind the stereo compartment — an ideal place for all the dangling wires.

PLYWOOD. Building this cabinet requires two full sheets of ¾" oak plywood, plus a sheet of ¼" plywood. Since sheets of plywood are awkward to handle, I built a jig that guides a circular saw for cutting the plywood pieces to size. I also used the same jig to guide a router to cut the grooves used to join all the plywood pieces together. (Refer to box, page 9.)

EXPLODED VIEW

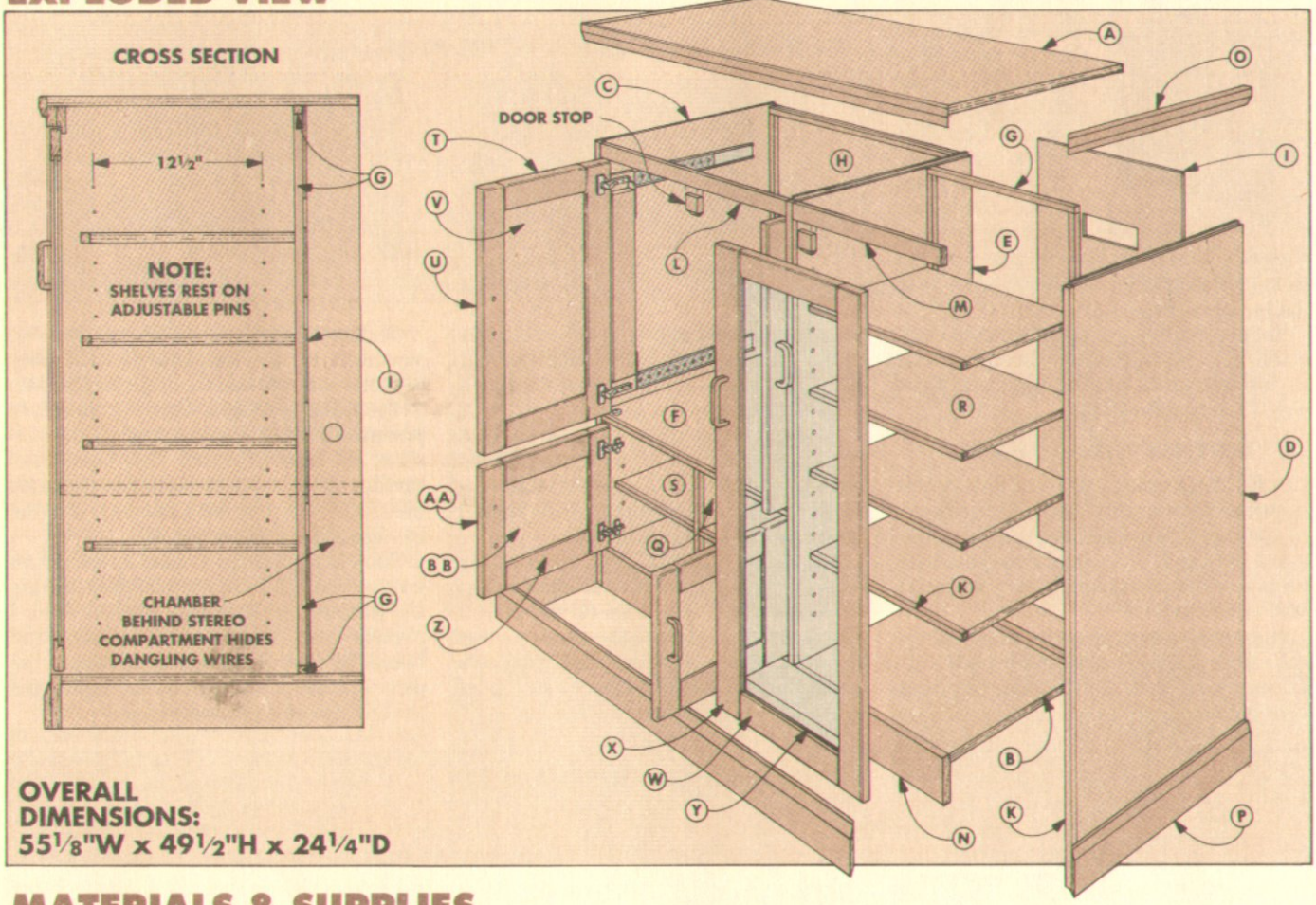

OVERALL DIMENSIONS:
55⅛"W x 49½"H x 24¼"D

MATERIALS & SUPPLIES

WOOD PARTS

CASE

A	Top	¾ ply - 23¾ x 54⅛
B	Bottom	¾ ply - 23 x 53⅛
C	Left Side	¾ ply - 23 x 49
D	Right Side	¾ ply - 23 x 49
E	Vertical Divider	¾ ply - 23 x 44¾
F	Horizontal Divider	¾ ply - 23 x 32⅜
G	Keeper Cleats	¾ x ¾ - 32' (rgh)
H	TV Back	¼ ply - 31⅞ x 29½
I	Stereo Back	¼ ply - 20 x 44¼
J	Storage Back	¼ ply - 31⅞ x 14
K	Edging Strips	¾ x ¾ - 25' (rgh)
L	Upper TV Rail	¾ x 1½ - 31⅞
M	Upper Stereo Rail	¾ x 1½ - 20
N	Lower Case Rail	¾ x 4½ - 52⅝
O	Upper Molding	½ x 1½ - 9' (rgh)
P	Lower Molding	½ x 3¾ - 9' (rgh)
Q	Storage Divider	¾ ply - 16¾ x 14

SHELVES

R	Stereo Shelves (4)	¾ ply - 15¾ x 19⅞
S	Storage Shelves (2)	¾ ply - 15¾ x 15⁷⁄₁₆

DOORS

T	TV Door Rails (4)	¾ x 2⅝ - 11³⁄₁₆
U	TV Door Stiles (4)	¾ x 2⅝ - 28
V	TV Door Panels (2)	¼ ply - 11⅛ x 23⅛
W	Stereo Door Rails (2)	¾ x 2⅝ - 15¼
X	Stereo Door Stiles (2)	¾ x 2⅝ - 42¾
Y	Glass Panel Stops	¼ x ⅜ - 10' (rgh)
Z	Storage Door Rails (4)	¾ x 2⅝ - 11³⁄₁₆
AA	Stor. Door Stiles (4)	¾ x 2⅝ - 14
BB	Stor. Door Panels (2)	¼ ply - 11⅛ x 9⅛

SUPPLIES

- (6) Self-Closing Concealed Hinges
- (2) Pair Sliding Door Hardware
- 15⅛" x 37⅞" Sheet ⅛"-thick Glass
- (5) Door Pulls (3¾" bore)
- (24) Spoon-Style Shelf Supports

CUTTING DIAGRAM

ALSO NEED: Two 4x8 sheets ¾" plywood, plus One 4x8 sheet ¼" plywood

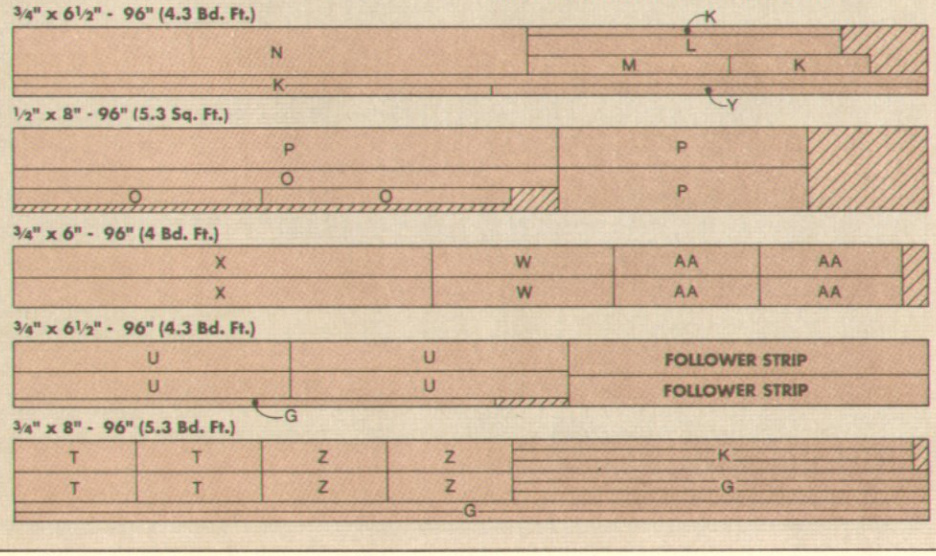

PLYWOOD CASE

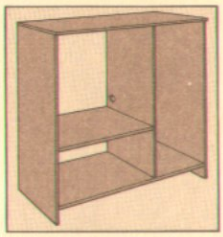

The Entertainment Center consists of three main groups of parts—the plywood case, adjustable shelves, and doors.

The case (and also the shelves) are built from two 4x8 sheets of ¾"-thick plywood (good on two sides). All the pieces are held together with tongue and dado joints.

Keeping all the parts straight can be a little confusing. So, to get myself organized, I started by cutting all the pieces to finished size. Then I cut the joints.

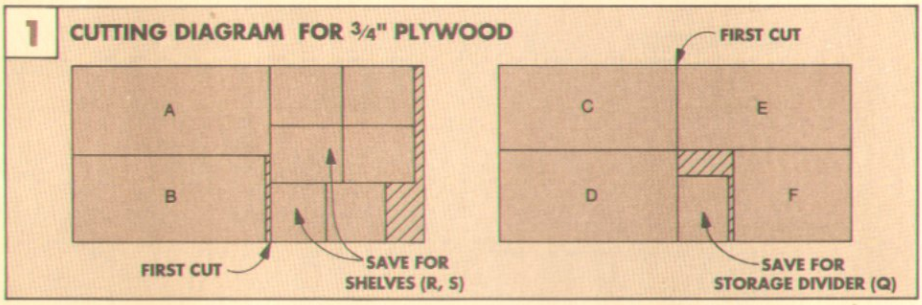

CUTTING THE PLYWOOD

I used a shop-made edge guide like the one shown in the box on the opposite page to cut all the pieces from the two sheets of plywood, see Fig. 1. (You could also use a circular saw and a straightedge, or a table saw with a rip fence.)

THE FIRST SHEET. In order to get all the parts from just two sheets of ¾" plywood, I followed a particular cutting sequence. First, I cross-cut one of the sheets to produce a piece the finished length (54⅛") of the **case top (A)**, see Figs. 1 and 2. Set aside the short half of this piece to be used later for the plywood shelves, see Fig. 1.

Now rip the long half of the sheet to finished width, producing the case top (A), see Fig. 2. Rip the other piece to finished width (¾" *narrower*), then cut it to finished length for the **case bottom (B)**.

THE SECOND SHEET. Next, cross-cut the second sheet of plywood to produce a piece 49" long for the case sides (**C** and **D**), see Figs. 1 and 2. (Set aside the shorter cut-off piece for right now.) Then rip the piece to produce identically sized pieces for the **left side (C)** and **right side (D)**, see Fig. 2.

Without changing the position of the table saw fence, rip the remaining plywood piece to produce two pieces (E, F) the same width as the sides, see Fig. 2. Then cut these two pieces to finished length to produce the **vertical divider (E)** and the **horizontal divider (F)**, see Fig. 2. (Set aside the small piece that's left to be used later for the storage divider, Q, see Fig. 1.)

Shop Note: It helps to label all the pieces now so you can keep track of them during the joinery and assembly stages. Also, I clearly labeled the "top," "inside," and "front" of each piece. This helps orient the pieces properly when you start cutting the joints in the next series of steps.

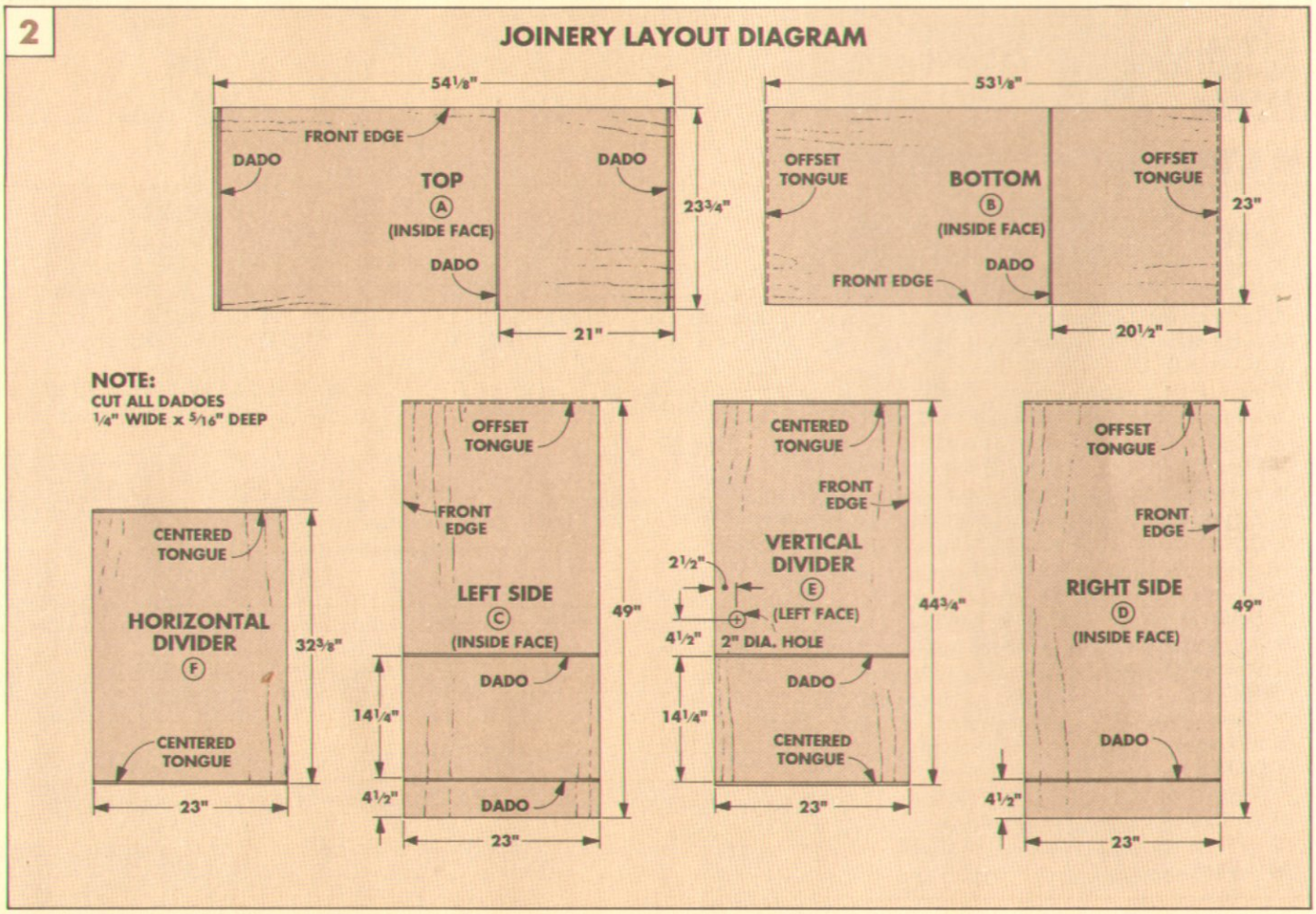

CUTTING THE JOINTS

When all the case parts have been cut to finished size, work can begin on the joinery. Each of the six pieces has at least two cuts.

MEASURE AND MARK. Again, to keep everything organized, I marked the position of each tongue and dado on the plywood before actually cutting the joints, see Figs. 2 and 3. First I cut the dadoes.

ROUT DADOES. I used a ¼" straight bit in the router to cut all the dadoes. But rather than try to balance the workpiece on my router table, I held the router in my hands and guided it with a straightedge, see Shop-Made Edge Guide, below.

ROUT TONGUES. Next, I used a rabbet bit to rout the ¼"-wide rabbets that form the tongues. Some tongues are *offset* (formed by routing a rabbet on one edge of the workpiece), see Fig. 4. Some tongues are *centered* (formed by routing a rabbet on two sides of the workpiece). This produces a tongue centered on the thickness of the workpiece, see Fig. 5.

Shop Note: A standard rabbet bit cuts a ⅜"-wide rabbet. So I replaced the standard pilot bearing with a larger bearing to rout the ¼"-long tongues. (For sources of this bit and bearing, see page 31.)

Shop Tip: It's best to start by routing a test tongue on a scrap piece of plywood. This way you can sneak up on the depth of the rabbet to produce a tongue that fits the dado.

First I routed the offset tongues on *both* ends of the case bottom, and the *top* end of the case sides, see Fig. 4. Then adjust the bit to cut a centered tongue on the ends of the dividers, see Fig. 5.

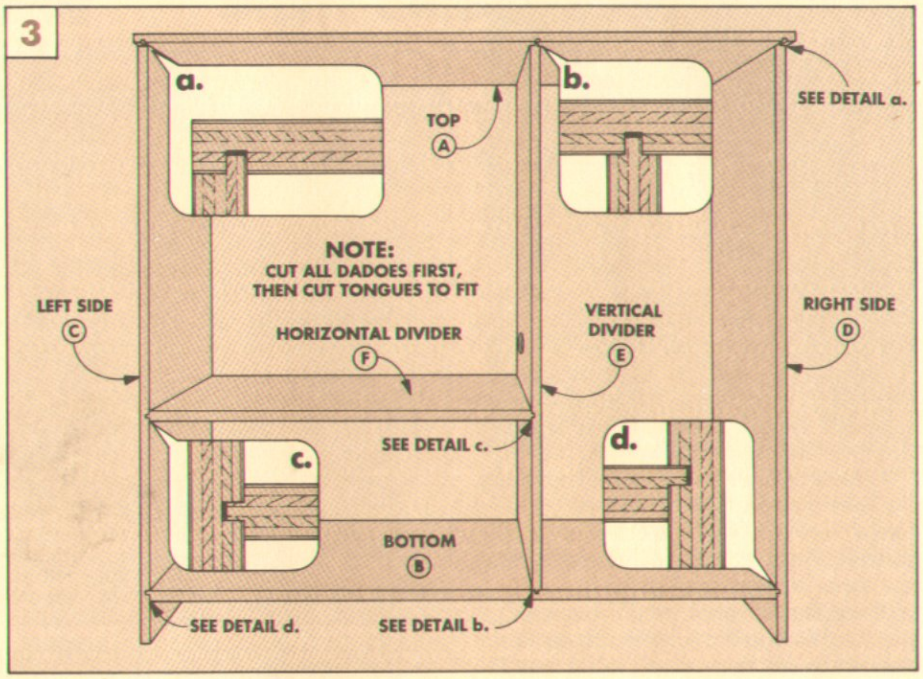

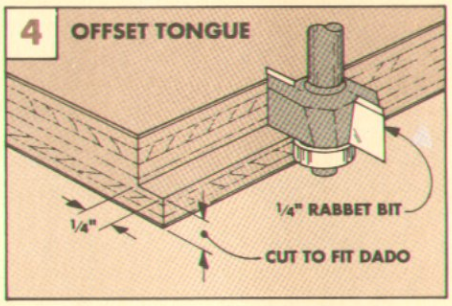

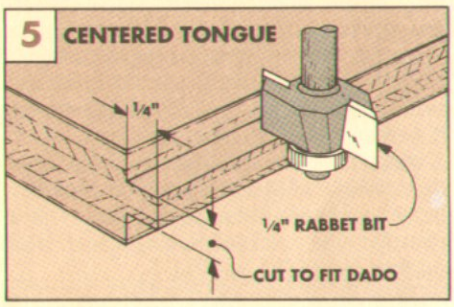

SHOP-MADE EDGE GUIDE

Sometimes it's easier to use a circular saw to cut a full sheet of plywood than it is to balance a 4x8 sheet on the table saw. And a shop-made edge guide makes using a circular saw more accurate. The best thing about this edge guide is that it can be used to guide either a circular saw or a router, see photos at right.

The secret lies in the way the jig is built. It's made from a base of Masonite that's screwed to a narrow piece of plywood, see drawings at right. (I made the jig 4 ft. long for cross-cutting a full sheet of plywood.)

Note: By starting with a wide enough base you can make the edge guide fit both your circular saw and your router.

First cut off the right edge of the base by running the circular saw along the right edge of the fence. Then, do the same thing on the other side of the jig with a straight bit in the router. (Rout from left to right.)

To use the jig, just line up the edge of the base to your intended cut line and clamp the jig in place. Now run the tool along the fence.

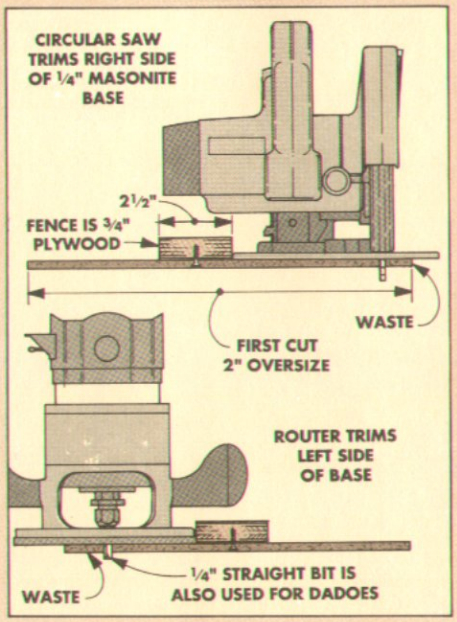

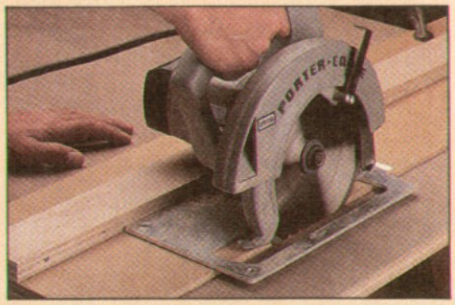

CLEATS, BACKS & EDGING STRIPS

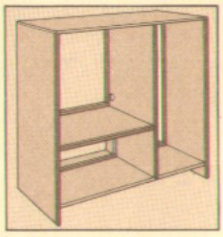

Once you've cut the joints on all the plywood parts, the case can be assembled. But first, to check that the case is square and the joints fit well, I dry assembled the parts.

Note: Keep all the corners flush at the back. This way, the front edge of the top (A) should overhang the side panels by ¾".

When you're satisfied the case fits well, assemble it with glue and clamp all the parts together. (We're offering some assembly tips in the box below, and also on page 16.)

KEEPER CLEATS. After the case is glued up, measure the openings for the three plywood backs, see Fig. 6. Then cut four **keeper cleats (G)** for each of the openings to hold the backs in place, see Fig. 6a.

Note: The ¼" plywood **TV back (H)** is mounted flush to the outside of the case, see Fig. 6a. So nail these cleats ¼" in from the back edges. But the **stereo back (I)** and **storage back (J)** are *inset* 4½", see Fig. 6b.

BACKS. Now the three ¼" plywood backs (H, I, J) can be cut to fit. But don't screw them to the cleats just yet — you'll need to remove them later to cut openings for wires.

EDGING STRIPS. Next I turned my attention to the front of the cabinet. The first step here is to cover the exposed edges of the plywood sides and dividers with hardwood **edging strips (K)**, see Fig. 7.

To do this, first rip four strips of ¾"-thick stock to width to match the thickness of the plywood parts. Then cut two strips to finished length to fit the edges of the case sides, and glue them in place, see Fig. 7a. Next, cut and glue an edging strip onto the vertical divider, see Fig. 7b.

For the horizontal divider, sneak up on the length of the strip until it fits between the left side and the vertical divider, see Fig. 7.

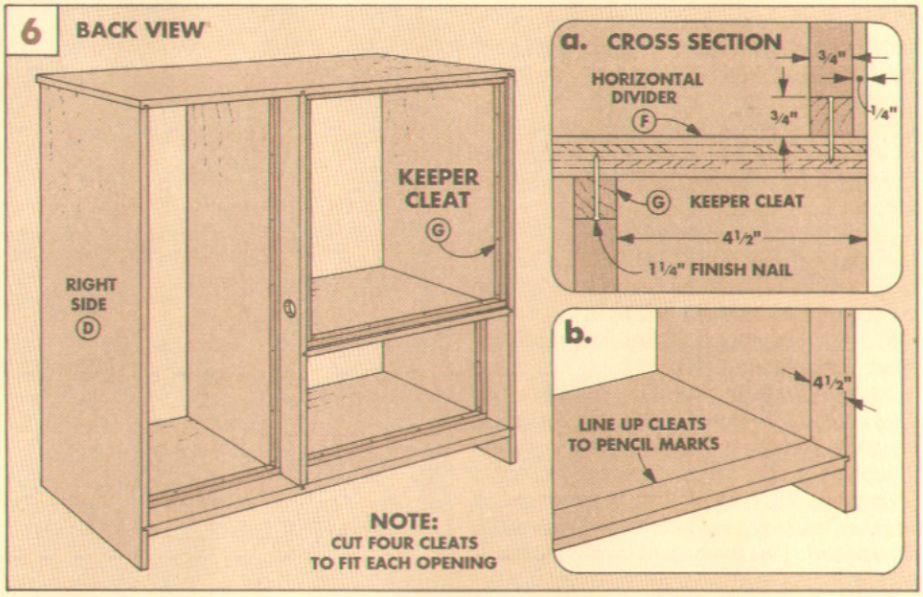

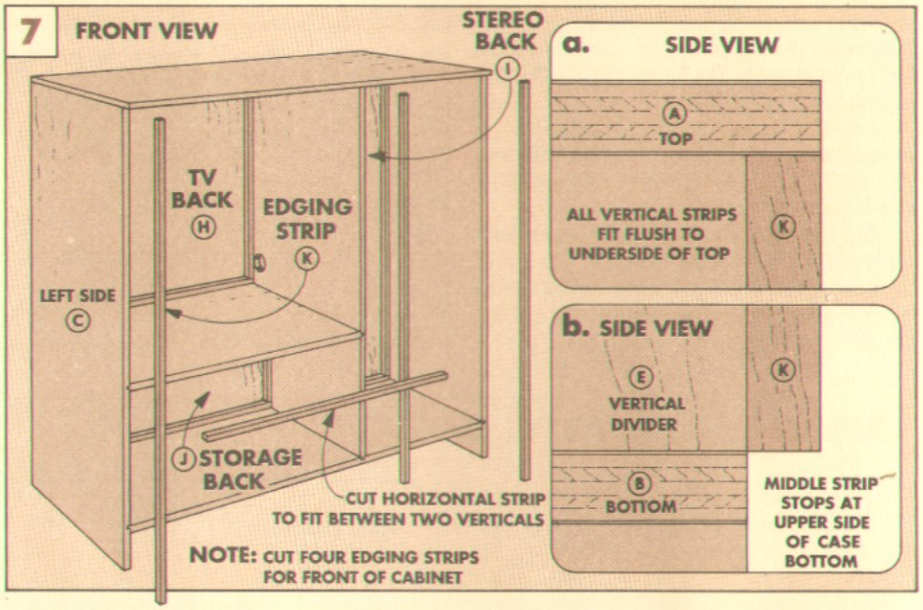

CLAMPING TIPS

You can't always get a clamp where you want it. That's what I found when gluing the top of the cabinet to the sides.

Instead of clamps, I used short nails to temporarily pull the pieces together. Start the nails at a high angle, and make sure they don't poke through the side.

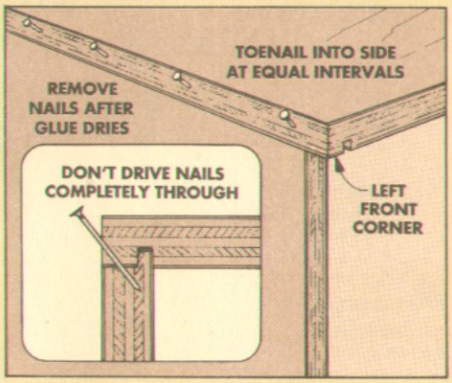

It's difficult trying to cross one clamp over another. The problem is the outside clamp — it's jaws aren't quite long enough.

I use a pair of 2x4s that extend beyond the workpiece. The jaws grab onto the 2x4s and transfer clamping pressure across the work.

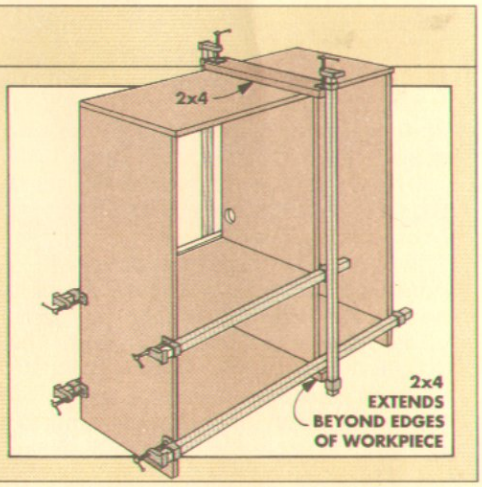

RAILS & MOLDING STRIPS

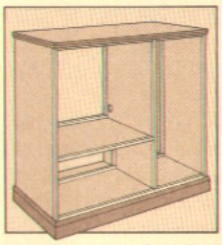

After you've completed attaching the edging strips to the sides and dividers, the plywood edges remain exposed on the case top and bottom, refer to Fig. 7.

These edges aren't covered with edging strips, but with a molding strip (along the top), and a rail (across the bottom), see Figs. 9 and 10.

UPPER RAILS. I made the front rails for the case from ¾"-thick oak. The upper rail is divided into two pieces, the **upper TV rail (L)** on the left, and the **upper stereo rail (M)** on the right, see Fig. 8.

Start by cutting both pieces 1½" wide, and to length to fit their openings. Then glue and clamp them in place.

LOWER RAIL. Next, the **lower rail (N)** is cut to width and length, see Fig. 8. This covers the exposed plywood edges on the bottom, and keeps the cabinet from sagging.

CUT MOLDING. Once the lower rail is glued in place, strips of ½"-thick molding can be added around the top and bottom of the case, see Fig. 8. I cut a bevel on the face of each strip to add a decorative look to the case.

Before cutting this bevel, first rip the three sections of **upper molding (O)** to finished width, see Fig. 9. Then do the same for the **lower molding (P)**, see Fig. 10.

Next, cut each section of the upper and lower molding to rough length (several inches longer than needed).

Now, before mitering the molding strips to finished length, the bevel can be cut on the front edge of each strip, see Figs. 9 and 10. I did this on the table saw with the blade tilted to 20°, see box at right.

ATTACH MOLDING. When all the sections of molding have been beveled, you can miter them to length and glue them in place.

Shop Note: There's a trick to getting the molding strips to fit around the cabinet with a minimum of gap at the mitered corners. The trick involves starting with the front (the longest) strip of molding.

First cut a 45° miter on one end of the strip. Then measure the case to determine the finished length. Now miter the other end of the strip so the distance from short-point to short-point of the miters equals this length.

With the front strip cut the correct length, temporarily clamp it in place while you measure for the side strips. These strips are first mitered on the front edge, then cut to length with a 90° cross-cut on the back edge.

When all the molding strips have been cut to fit the cabinet, they can be glued and clamped in place. Do this one at a time, again beginning with the front strip.

DOOR STOPS. After the rails and molding strips have been glued onto the case, door stops can be cut and attached to the upper rail. There's one stop for the TV doors, and one stop for the stereo door. (The storage doors are stopped by the storage divider that's installed later.)

A zero-clearance insert prevents the narrow edge of a workpiece from tipping into the table saw opening. A push stick keeps your hand away from the spinning blade.

Start with a blank cut to finished width and rough length to be used for both stops. Then cut a ¼"-wide rabbet on the lower edge, see Fig. 8a. The rabbet stops the doors so they're inset ¼" from the front of the cabinet.

After the stops are cut to size, you can soften their appearance by cutting a chamfer on the lower ends of each stop, see Fig. 8a. Then glue the stops into place on the back edge of each upper rail, see Fig. 9 and the Exploded View on page 7.

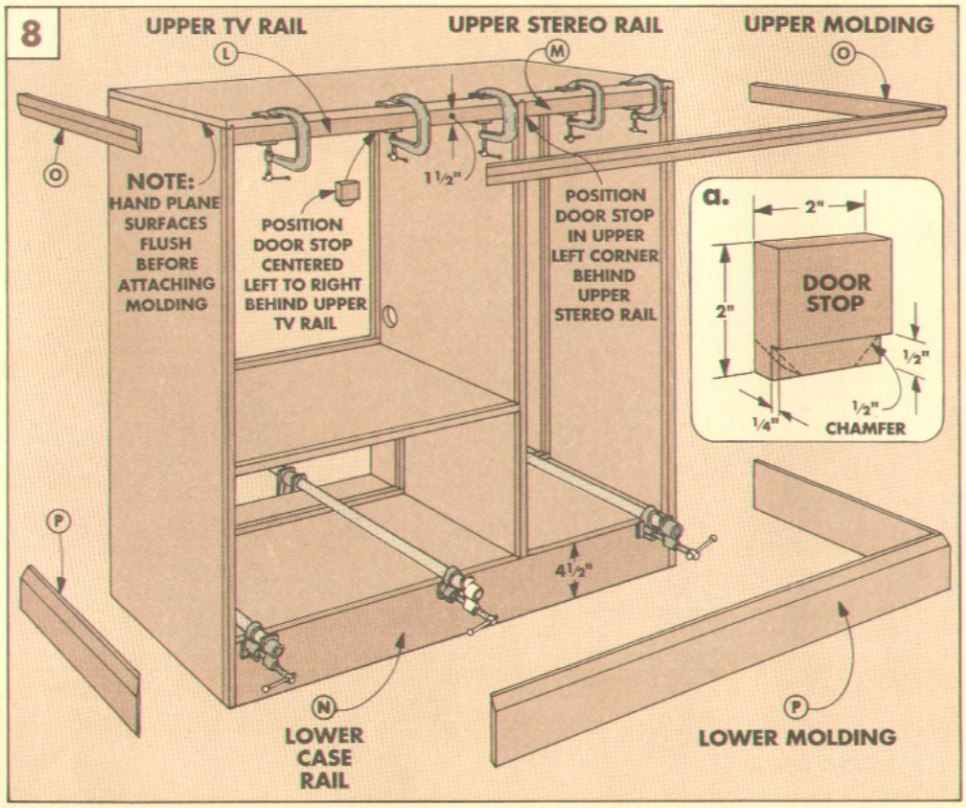

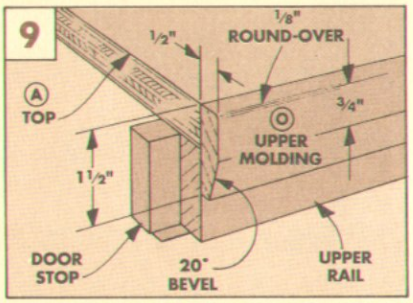

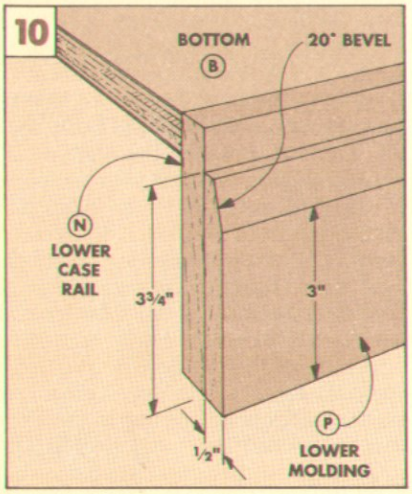

STORAGE DIVIDER & SHELVES

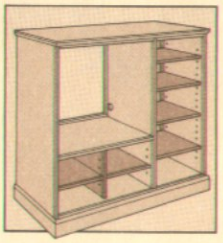

When the outside of the case is completely built, you can use the left-over plywood to build the parts that go inside.

DIVIDER. The first part is a **divider (Q)** for the storage compartment. The height (length) is easy to figure — it's the same as the height of the compartment, see Fig. 11. But the depth takes a little figuring. First measure from the front edge of the cleat that holds the plywood back (J) in place, to the front edge of the edging strip on the horizontal divider, see Fig. 11.

Then subtract ¾" from this distance (to allow for the edging strip that's attached later). Now, subtract an extra 1" to allow for a ¼" inset when the ¾"-thick door is closed. Cut the divider to this finished width. (In my case, the dividers are 16¾" wide.)

EDGING STRIPS. Before screwing the divider in place, glue an edging strip to the front to cover the exposed plies. I cut this a little longer than needed, then trimmed it to length after it was glued in place. (For more on this procedure, see Shop Notes, page 17.)

Now the divider can be centered in the storage compartment and screwed in place from the top and bottom, see Fig. 11.

SHELVES. Next, cut four plywood **stereo shelves (R)** and two **storage shelves (S)** to fit in their compartments, see Fig. 12.

Note: All six shelves can be cut from the plywood left over after cutting the case top and bottom, refer to the Plywood Cutting Diagram on page 8.

Also note that the shelves are installed with the grain direction running from side to side. (This is the shelf *length*.) But first rip the plywood into three equal-width pieces, in my case 15¾". (This is the shelf *depth*.)

Then cut the shelves for each compartment to length so they're ⅛" shorter than the compartment is wide, see Fig. 12. Now glue an edging strip on the front edge of each shelf, see Fig. 12.

MARKING TEMPLATE. To locate the position of the holes for the shelf support pins, I used a template made from ⅛" Masonite, see Fig. 13. Shop Note: Make the template to fit the taller (stereo) opening. Once the holes are drilled on that side, cut the template shorter for the storage compartment.

To make a template, first cut a piece of Masonite to a width of 6", see Fig. 13. Then cut the template to length to fit inside the stereo opening. Now, drill a series of ¼" holes the full length of the template.

Note: Position the holes 2½" from the back edge of the template, see Fig. 13. Then, always keep this edge to the *rear* when marking the holes. This positions the pins an equal distance from the front and back of each shelf when they're finally installed.

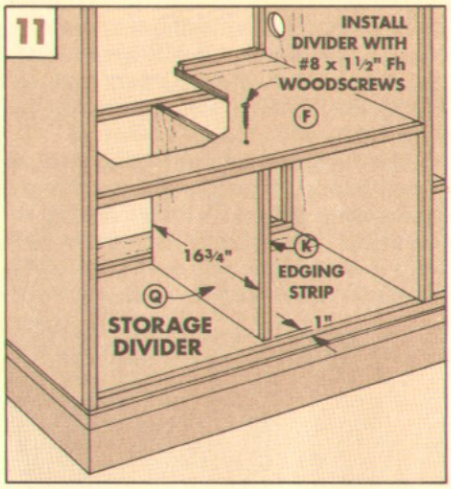

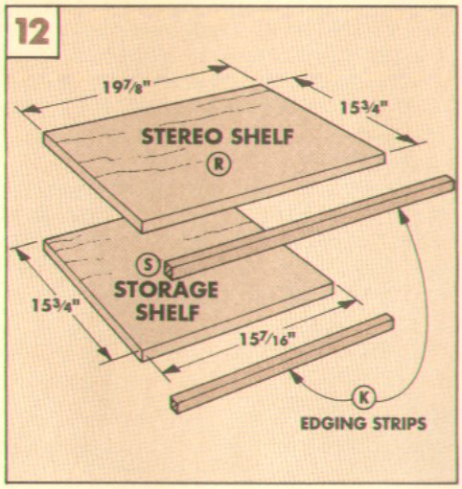

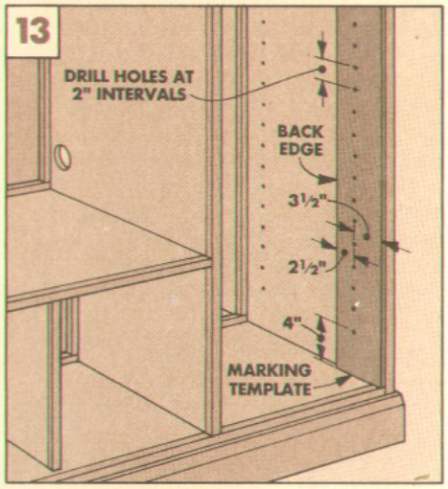

OPENINGS FOR WIRES

One of the best parts of this Entertainment Center is the "wire management" area behind the stereo compartment. It hides all the wires that look like spaghetti coming out of the back of the electronic components.

To get to the components, you have to cut narrow slots in the plywood back, see Fig. 14. But first, position the shelves in the stereo compartment to fit your components.

STEREO OPENINGS. Mark the position of all the slots from *inside* the stereo compartment. I did this by first drilling a small starter hole to indicate the corners of each slot. Then I removed the plywood back and used a sabre saw to complete the slot openings.

TV OPENING. If the television you'll be placing in the cabinet is too deep from a "hump" on the back, cut an opening in the TV back to accommodate the hump, see Fig. 14.

Then screw all the backs in place.

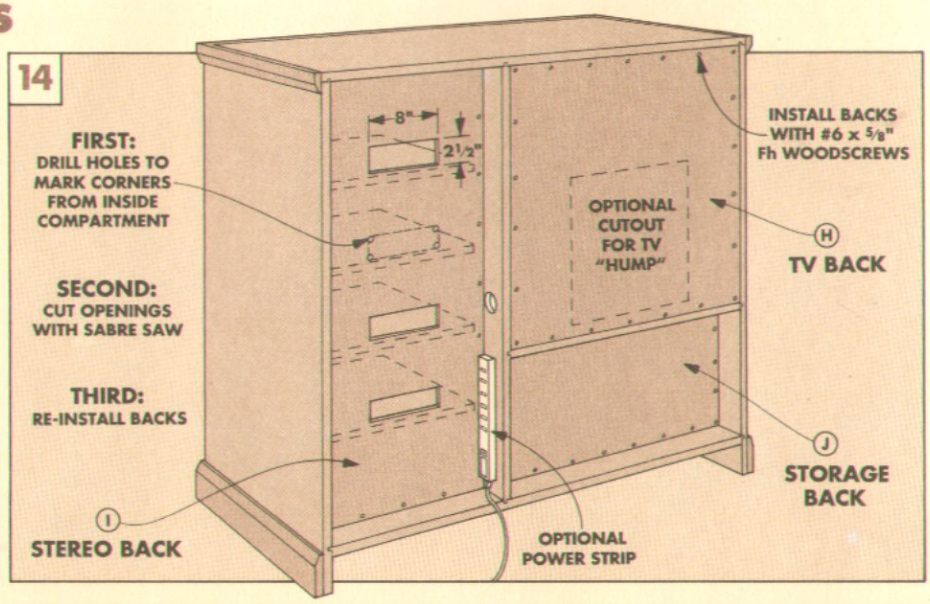

DOORS

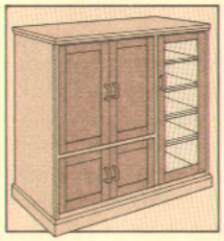

The most challenging part about this project is building the doors. The doors are inset ¼" from the front edge of the cabinet, with an equal (⅛") space around each door.

Rather than build the doors to allow for the ⅛" space, I think it's easier to build them to fit tightly inside the cabinet. Then create the ⅛" space all around by trimming the doors *after* they're assembled.

RAILS AND STILES. First I cut two **rails (T, W, Z)** and two **stiles (U, X, AA)** for each door frame. Rip these to a uniform width (2⅝") from ¾"-thick stock, see Fig. 15.

Then cut all the stiles to finished length so they fit the height of each door opening exactly, see Fig. 15. Next, set the stiles in the cabinet and cut the rails to fit between them, adding ½" to allow for ¼"-long tongues on the ends of each rail, see Fig. 16.

GROOVES. All the doors have a panel that fits in a groove centered on the inside edge of the frame, see Fig. 16. On the stereo door this is a ⅛"-thick piece of smoked glass. On the other doors it's a piece of ¼" plywood.

I used the table saw to cut the groove for a snug fit with the ¼" plywood.

Shop Note: The plywood I used for door panels had a lower grade back — not too attractive when the doors are open. So I covered the inside of each door panel with a matching (oak) veneer before assembly. If you use veneer, cut the grooves to fit the plywood *plus* the thickness of the veneer.

TONGUES. When the grooves have been cut in the frame pieces for all five doors, cut ¼"-long tongues on the ends of the rails to fit in the grooves on the stiles, see Fig. 16.

ROUND-OVERS. Before assembling the doors, I routed a ⅛" round-over on the *inside* edge of each rail and stile, see Fig. 16. (The *outside* edges are rounded over after the doors are cut to fit the openings.)

To highlight the joint between the stiles and rails, I also rounded over the shoulder near the ends of the rails, see Fig. 16. To do this, first remove the pilot bearing from the round-over bit, see Routing Tip at right.

PANELS. Now the frames can be dry assembled (to check that they're square and the joints fit well). Then measure for the **panels (V, BB)** that fit inside the frames. To do this, add ⅜" to the inside dimensions of the frames. This allows for two ¼"-deep grooves, with a 1/16" gap all around to make assembling the doors easier.

Finally, the doors can be assembled with the plywood panels glued inside the frames.

CUT TO FIT. Now ⅛" can be trimmed off the outside edge of each door to create a uniform space. Note: To create ⅛" space *between* the double doors, I trimmed 1/16" off the mating (inside) stiles. The slightly different-width stiles won't be noticeable.

ROUTING TIP

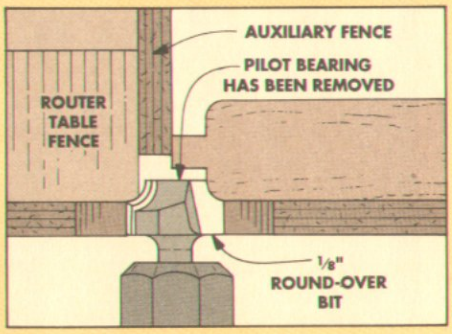

The pilot bearing on a round-over bit can sometimes get in the way. On a workpiece with a tongue, the bearing prevents the cutters from reaching the workpiece. And the bearing can slip into a groove on an edge.

So first I remove the bearing, then run the workpiece along an auxiliary router table fence — it acts just like a bearing.

INSTALL THE GLASS. Before installing the glass panel in the stereo door, I first routed a rabbet around the back inside edge of the frame. To do this, I used a ¼" rabbeting bit adjusted to cut just deep enough to remove the inside lip of the groove, see Fig. 17.

I installed the glass with stops glued in the rabbets behind the glass. The **glass stops (Y)** are pieces of ¼"-thick hardwood cut to a width of ⅜", see Fig. 17a.

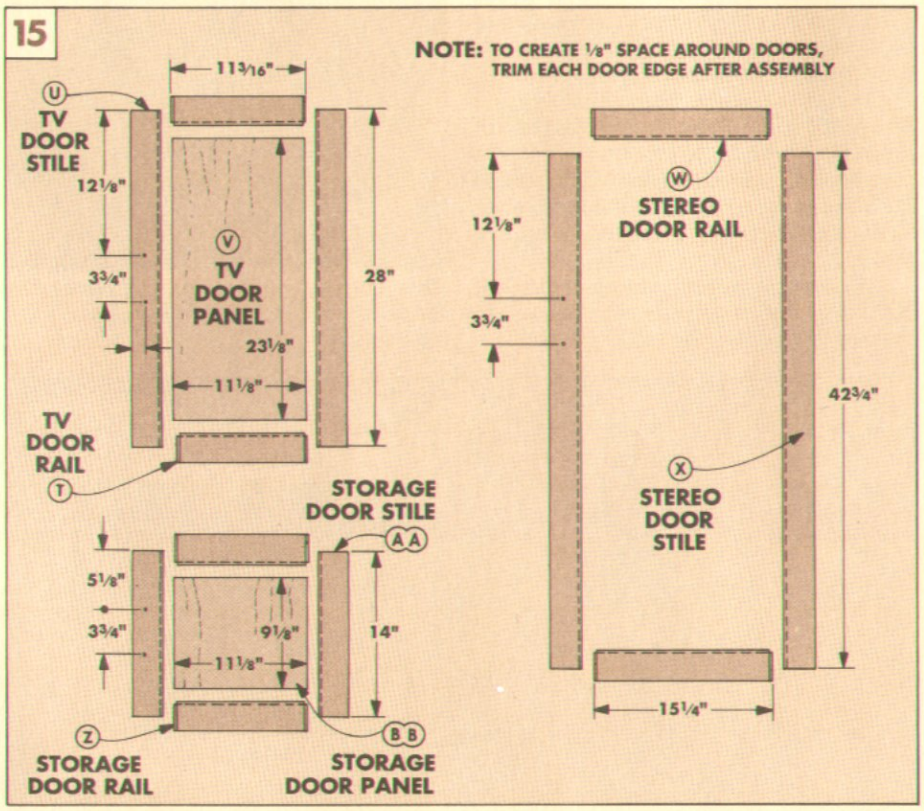

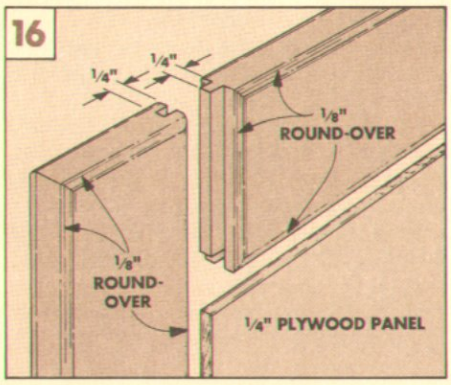

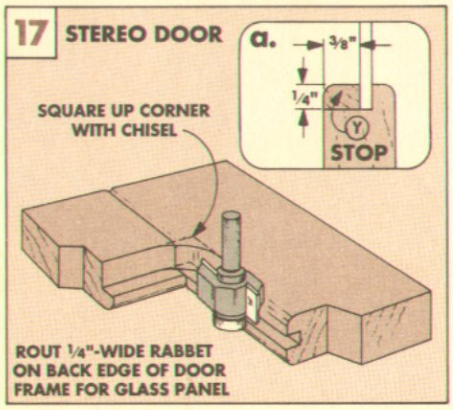

Concealed Hinges

What's the most difficult part of mounting doors in a cabinet? I think it's getting the hinges positioned correctly. If you're a little off, the door will fit crooked in the opening. If you're a *long* ways off, the door may not close at all.

The beauty of the concealed hinges I used on the Entertainment Center on page 6 is how easy they are to mount and adjust. It's simply a matter of drilling holes and screwing the hinges in place. There aren't any mortises to chop out.

ADJUSTABLE. But the best part comes after the doors are mounted. The hinges are adjustable — in three directions. By turning three screws, the door can be shifted 1/8" out or in, left or right, up or down. So if you're a little off at first, you can leave the hinges in place and make up for it with the adjusting screws.

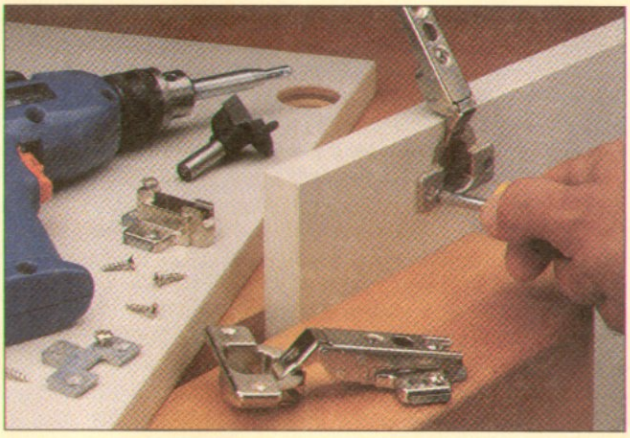

DESIGN. What makes this hardware so easy to use is its two-part design. The actual hinge has a round cup on the bottom that fits into a hole drilled in the door. Then a separate mounting plate fits on the cabinet.

When the two parts are mounted to the door and cabinet, hanging the door is simple. All you have to do is slide the hinge (on the door) onto the plate (in the cabinet). Then tighten a screw.

OTHER FEATURES. Another feature I like about these hinges is that they fit completely inside the cabinet, so you can't see the hardware from the outside. This works especially well on cabinets with no face frames, or modern kitchen cabinets.

Both types of hinges I used have a self-closing feature. You just pivot the door about halfway then let go — the door will close itself the rest of the way.

SOURCES. The hinges shown here are available from a number of sources, see page 31. Detailed instructions for mounting the hardware are usually included.

SWINGING DOOR

A concealed hinge consists of two parts. The actual hinge attaches to the door with a small cup on one end that fits into a 1 3/8"-dia. (or 35mm) hole in the door stile, see Fig. 1. At the other end, an arm extends out and slides into a mounting plate attached to the cabinet, see photo at right.

For the door to hang properly, the only trick is to get both parts of the hinge to align when the door is placed in the opening. There's an easy way to do this.

DOOR FRAME LOCATION. Begin with the door half of the hinge. First, drill a 1 3/8"-dia. hole on the door stile, see Fig. 1. Keep the centers of the holes the same distance from the *ends* of the door stile (in my case, 2"). Also, keep the edge of the holes the same distance from the *edge* of the stile (1/8").

Then press a hinge cup into the hole and use it as a template to mark the location of the two mounting screws. After the holes are drilled, screw the hinges to the door frame.

CABINET LOCATION. The mounting plate on the other end of the hinge is attached to the cabinet with three screws. To drill the screw holes, I made a template that positions the holes so the center of the mounting plate aligns with the center of the hinge cup, see Fig. 2.

Drill the hole pattern (shown in Fig. 2a), and add a cleat on the front edge to position the template on the front of the cabinet.

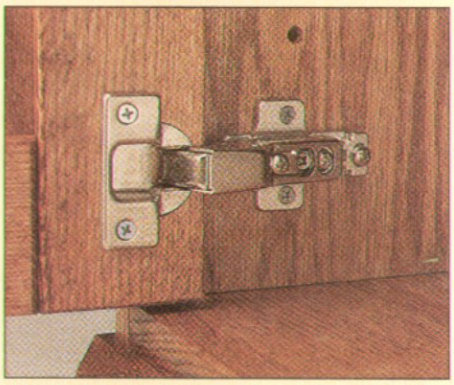

This concealed hinge has two parts. The "cupped" part fits in a hole in the door. Then a mounting plate is screwed to the cabinet.

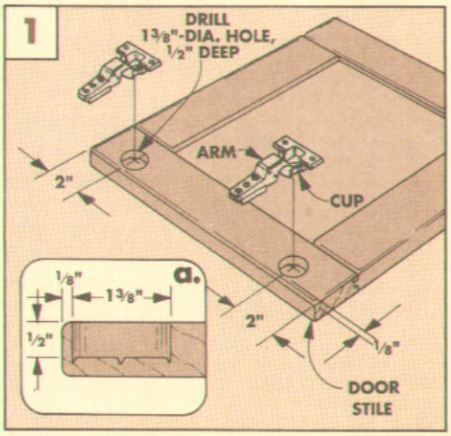

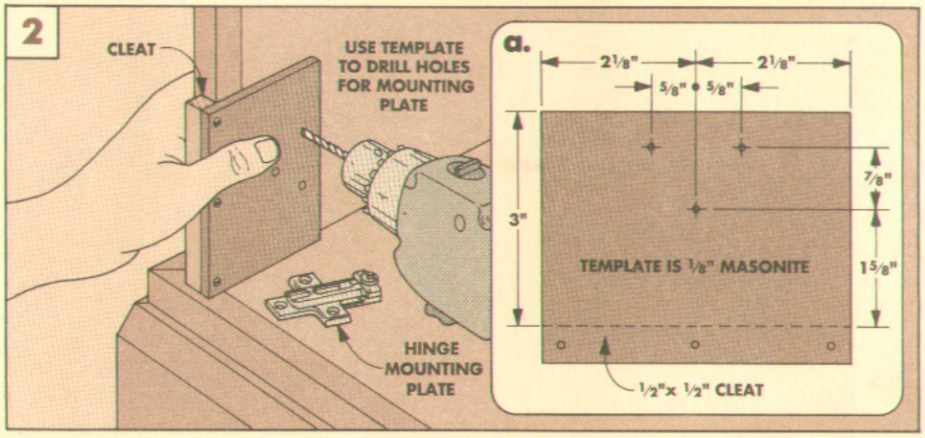

HINGED SLIDING DOOR

The hardware for a hinged sliding door is installed in almost the same way as the swinging door hinge explained on the opposite page. But, to allow it to slide inside the cabinet, the mounting plate is attached to a sliding roller mechanism. The roller unit (which acts much like a typical drawer slide) is then attached inside the cabinet.

The door is installed with two sliding roller mechanisms, one at the top of the door and one parallel to it at the bottom. Also, to keep the door sliding smoothly into the cabinet, the upper and lower slides are connected by a wood follower strip, see Fig. 4.

FEATURES. Sliding hinges are used when you want to get an open door out of the way. In the Entertainment Center, the doors are attached so they slide in *beside* a TV. But a door mounted with this hardware can also be attached so the door flips up and slides *over* the TV. Either way, the hardware is installed the same.

INSTALL HINGE CUP. To mount the hardware, begin the same as for the swinging door, see Fig. 3. Locate the holes for each cup an equal distance from the end of the stile, and an equal distance from the outside edge. This distance determines the gap between the door frame and the cabinet.

ATTACH SLIDES. After the hinge cups are installed, temporarily push the mounting plates (with roller slides attached) onto the arms that extend from the hinge, see Fig. 4. Now cut a follower strip to tie the upper and lower slides together, and screw it to the mounting plates with woodscrews.

INSTALL SLIDES. Now the roller slides can be mounted inside the cabinet. But first remove the slide assembly from the door.

To keep the roller slides aligned with the hinge cups on the door, they must be positioned properly in the cabinet. To make this easier, I use a spacer strip to temporarily hold the slides in place while screwing them to the cabinet, see Fig. 5.

GUIDE ROLLER. To keep the door sliding smoothly into the cabinet, a guide roller is screwed to the front edge of the cabinet shelf, see Fig. 6. As the door is opened, it pivots around this roller. Then, as the door slides inside, the roller keeps the door from slapping against the TV.

Now the hinges can be reattached to the mounting plates, see Fig. 7. When the hardware is together, final adjustments can be made to position the door in the opening.

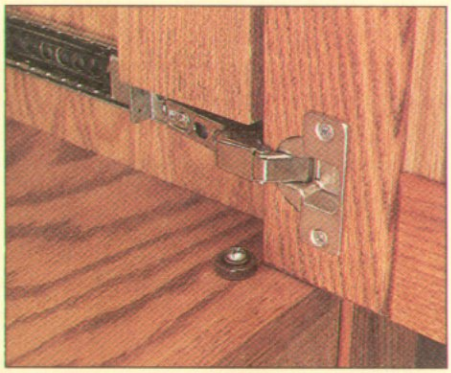

The sliding hinge has the same basic parts as the swinging hinge. In addition, it has a guide roller and sliding mechanism.

DOOR STOP. The first adjustment I make is to limit the distance the door can travel into the cabinet. A small block glued to the cabinet shelf will stop the door from sliding completely into the opening, see Fig. 5. This prevents the door pulls from banging into the front edge of the cabinet.

Finally, adjust the door for an equal gap all around. These adjustments are made by turning the screws in the two hinge parts.

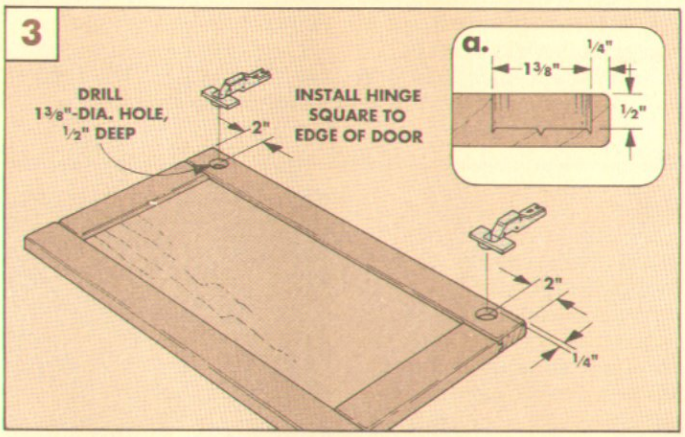

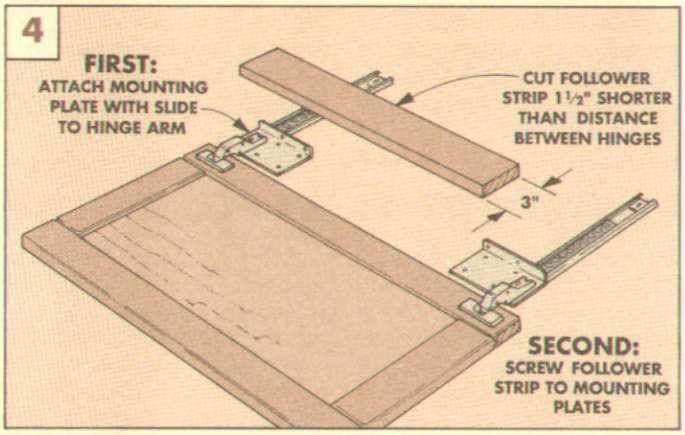

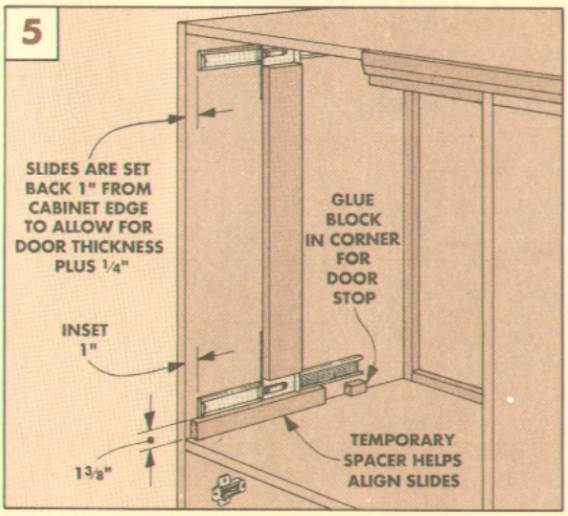

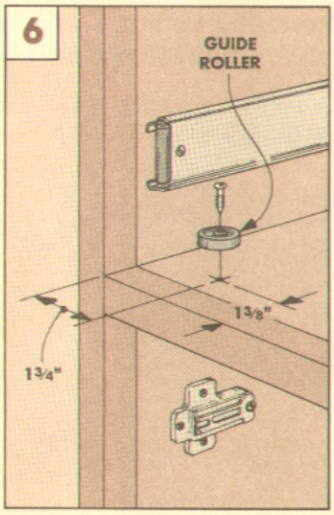

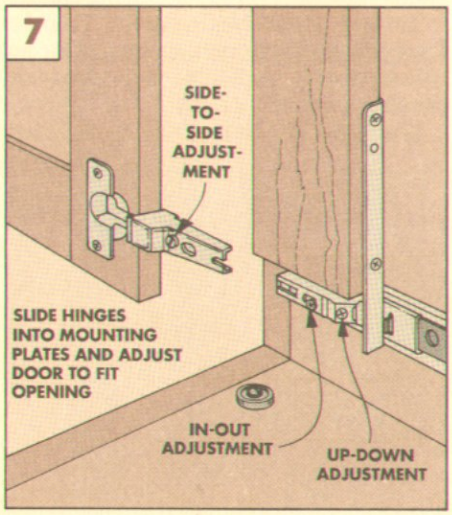

Shop Notes

SQUARING UP A CABINET

■ The challenge to fitting inset doors (such as on the Entertainment Center on page 6) is to create a uniform gap between the door and the opening. If the door or cabinet is even a little out of square, any gap between the door and the cabinet won't be consistent all around.

FLAT SURFACE. A good place to start squaring up the cabinet is to find a flat surface for assembly. The Entertainment Center is so big it probably has to be assembled on the floor.

Shop Tip: Since the floor of my shop isn't perfectly flat, I use an old solid core door as an assembly platform.

DRY ASSEMBLY. First dry assemble the case to check that the cabinet is square and the joints fit together well. The problem is to keep the door opening square — especially at the front where the doors will fit. To do this I use a pair of ¾"-thick sticks that force the opening square and keep it that way during assembly, see Fig. 1.

DIAGONAL STICKS. The trick is to cut sticks the *exact* same length so they wedge in place when the opening is square.

Start with one stick that's a little *longer* than the diagonal length of the opening. Then fit one end of the stick into one corner, and draw a mark showing where to cut the stick to fit into the opposite corner.

Now set the stick across the other diagonal and mark it again. Cut the stick to the longest marked length, then cut a second stick the same length.

Once the sticks are cut to length, try to wedge them in place across the opening, see Fig. 1. If the opening is out of square, both sticks won't fit.

In this situation, rack the cabinet into square, then trim an *equal* amount off each stick until they both fit the opening.

Once both sticks fit perfectly, use them to keep the cabinet square during glue up.

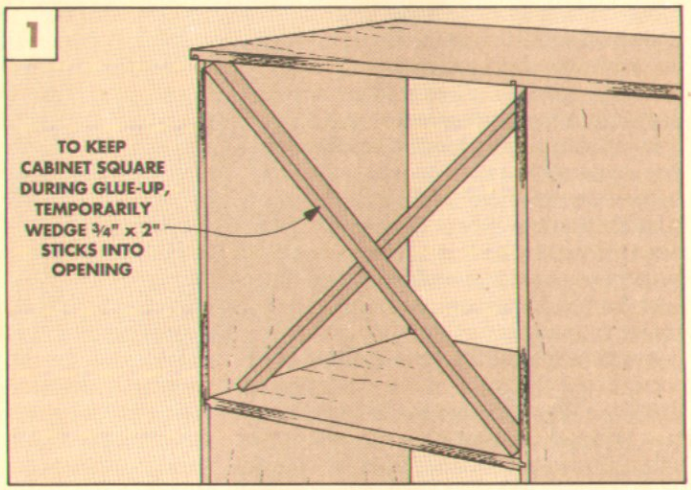

ROUTING RECESSES FOR SHELF PINS

■ I used shelf pins to mount the shelves in the Entertainment Center (see page 6). It's easy to slide the shelves in on top of the pins, but it can be a problem getting the front edges of all the shelves aligned, and keeping them that way.

To "lock" the shelves in place, I routed a shallow recess on the bottom of each shelf to fit over the pins, see photo at right.

TEMPLATE. The idea is to use a template so that the recesses align with the holes for the pins in the sides of the cabinet.

The template in this case was a piece of ¼" Masonite. I held the template in the cabinet, making sure the back edge was butted against the back cleat. Then I transferred the location of the holes in the cabinet to the template, see Fig. 1.

Now, cut a notch in the template centered on each of the two pencil marks, see Fig. 1a. I cut the notches ⅝" wide to accept a ⅝" guide bushing for the router.

ROUTING NOTCHES. Now the recesses can be routed in the shelves. First, clamp the template onto the shelf, with the back edges flush, see Fig. 2.

Mount a ⅝" guide bushing in the router base and a ½" straight bit in the router. Then rout a recess ⅛" deep for the shelf pins, see Fig. 2a.

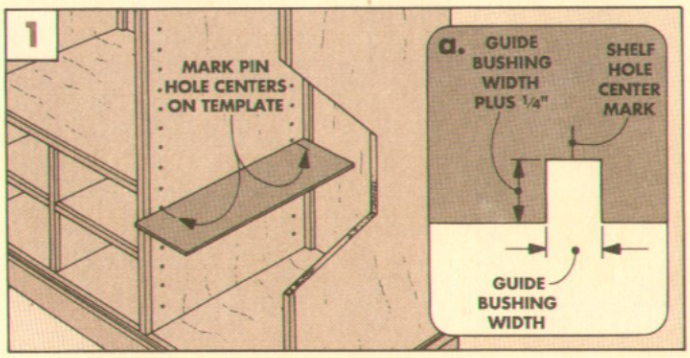

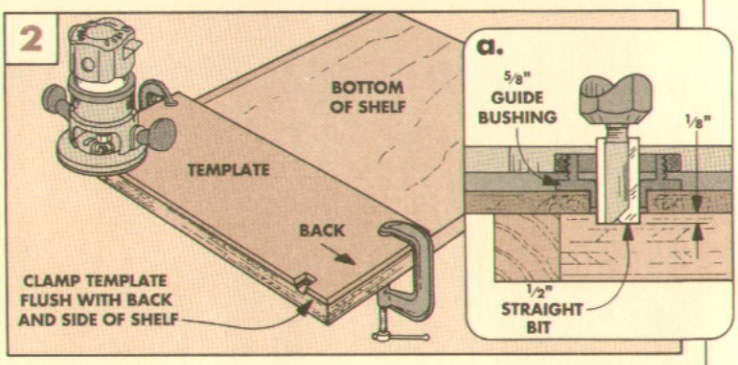

JIG FOR MORTISING MITERS

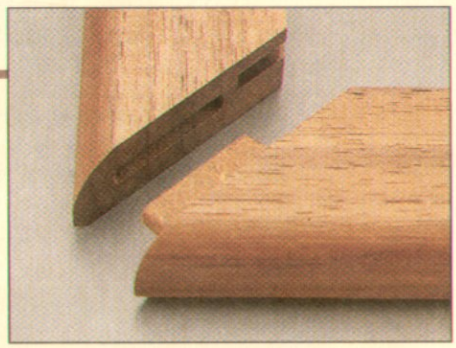

■ Normally, setting up a router table for cutting a spline mortise is a straightforward process. The depth of the mortise is determined by the height of the bit, and its length is controlled by two stop blocks on the fence.

But, routing mortises on the ends of *mitered* pieces (as needed for the Stationery Box, page 18) can present problems. First, you have to support the piece at the same angle as the miter. Then you have to contend with the large hole (for the bit) in the router table because the point on the miter can easily catch in the hole.

HOLDING JIG. I built a jig to help with this cut. The jig consists of a 45° support bracket glued to a thin base, see Fig. 1.

Cut the bracket from a piece of scrap that's thick enough to support the workpiece. Because a rabbet is cut on the long edge of the bracket, the bracket must be thicker than the workpiece, see Fig.1. (Since the workpieces for the Stationery Box are ½" thick, I used ¾"-thick scrap for the bracket. This allowed for a ½"-wide rabbet and a ¼"-wide lip to support the workpiece.)

SETTING UP. To set up the router table for the jig, first mount a ⅛" straight bit for a ⅜"-deep cut, see Fig. 2. (Be sure to include the thickness of the jig's base when setting the depth.)

Next, adjust the router table fence so the mortise is centered on the thickness of the workpiece.

Shop Tip: An easy way to do this is to rout a groove in a test piece the same thickness as your workpiece. After making one pass, turn the piece end for end and make another pass. If the second cut isn't centered, adjust the fence and try again with a fresh piece.

STOP BLOCKS. To establish where the ends of the mortise should start and stop, clamp stop blocks to the fence, see Fig. 3.

To check the placement of the stop blocks, I use a test piece that's mitered on one end. Clamp the test piece securely to the jig. Then, place the jig against the right stop block and pivot it down to plunge the workpiece onto the router bit, see Fig. 4. To rout the mortise, push the jig toward the left stop block, then back toward the right stop block.

ROUTING. Once you're satisfied with the setup, follow the same procedure used on the test pieces to rout the mortises in the ends of your workpieces.

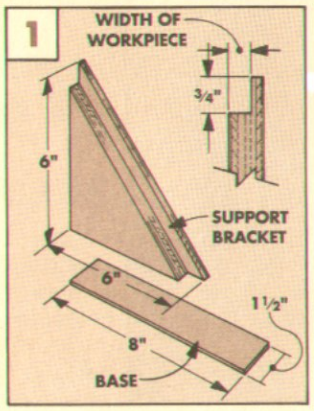

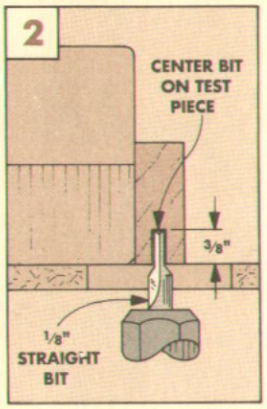

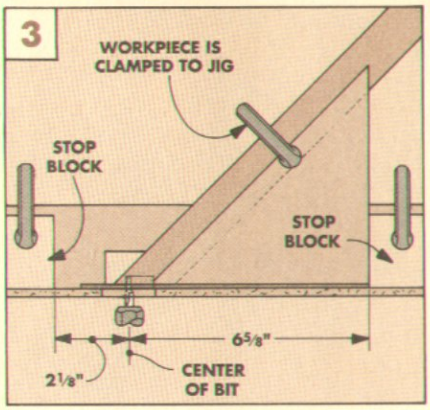

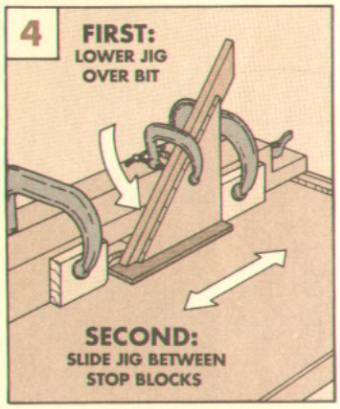

TRIMMING OFF EDGING STRIPS

■ A good way to hide the exposed edge of a piece of plywood is to glue on an edging strip made of hardwood. (That's what I did on the shelves for the Entertainment Center, page 6.) But sometimes, when you begin to apply clamping pressure to the strip, it slips around on the edge of the plywood.

Rather than trying to cut the edging strip to the exact length and fight this slippage, I cut the strip a little long and glue it on the shelf. After it's glued on, I trim the ends of the strip flush with the ends of the shelf.

However, the ends of the strip are in the way if you try to trim it on the table saw, see Fig. 1. So I use a spacer to provide a surface to run the shelf against.

Once the first end of the edging strip is trimmed off, flip the shelf over. Then, without moving the fence or the spacer, trim off the opposite end in the same manner.

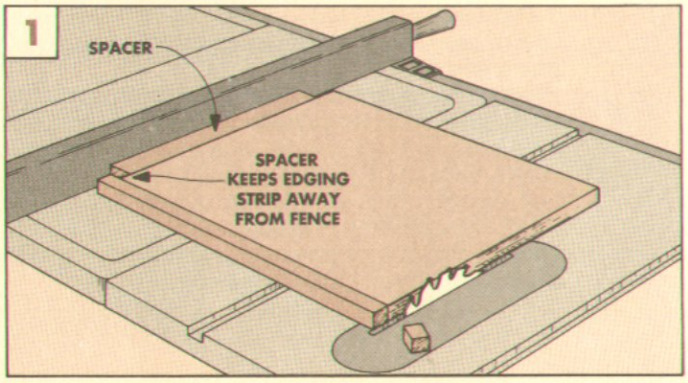

Stationery Box

The hand-cut dovetails catch the eye. But the unseen joinery — the splined-miter joints and the double tongue and groove joints — make this Stationery Box interesting and unique.

This Stationery Box is joined using two classic woodworking joints — miters and hand-cut dovetails. But there's more. The miters on the lid are strengthened with hidden splines. And the frame holds a raised panel in place with a unique double tongue and groove joint.

PANEL. Along with the joinery, the panel in the lid offers some interesting design possibilites. Since the panel is exposed on both sides, its grain can enhance the look of the inside of the box, as well as the outside. To take advantage of this for the box shown here (and on page 32), I edge-glued two pieces of cherry with highly-figured grain. But the panel would also look good with an inlay, or perhaps with some carving.

HOW IT GOES TOGETHER. The Stationery Box has three parts: the base, the box sides, and the lid. Each part is made separately, then attached to the others.

The lid and the base are a lot like mitered picture frames, with wood panels in place of the picture. The box sides are joined with hand-cut dovetails, and then glued to the base. (For more on hand-cutting dovetails, see the article on page 24.)

Finally, the lid is attached to the box with small brass hinges and a neat little lid support that's mortised into the box side.

WOOD AND FINISH. I used cherry and walnut to make the Stationery Box, and finished it with General Finishes' two-step oil and urethane finish.

EXPLODED VIEW

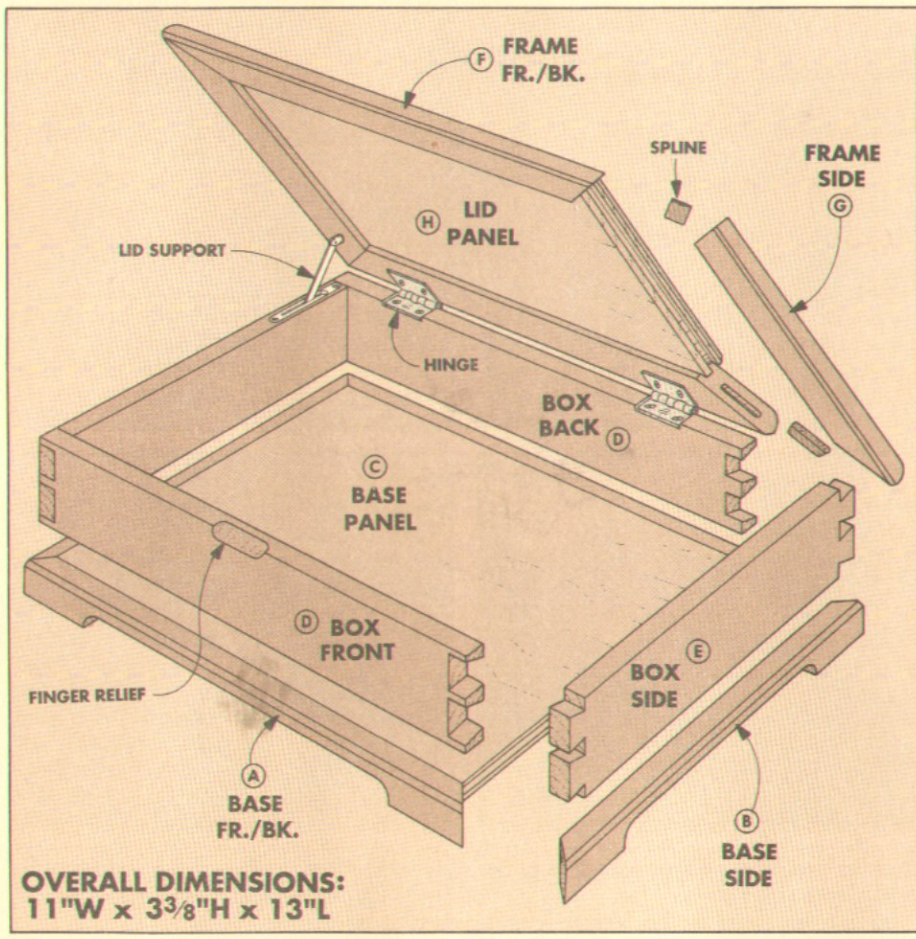

MATERIALS LIST

BASE		
A	Base Fr./Bk. (2)	½ x ¾ - 13
B	Base Sides (2)	½ x ¾ - 11
C	Base Panel	¼ ply - 10¼ x 12¼
BOX		
D	Box Front/Back (2)	½ x 1⅞ - 12½
E	Box Sides (2)	½ x 1⅞ - 10½
LID		
F	Frame Fr./Bk. (2)	½ x 1¼ - 12¾
G	Frame Sides (2)	½ x 1¼ - 10¾
H	Lid Panel	½ x 8¾ - 10¾

CUTTING DIAGRAM

½" x 3" x 25" (.5 SQ. FT.)

A	B
A	B

½" x 4½" x 24" (.8 SQ. FT.)

D	E
D	E

½" x 3" x 24" (.5 SQ. FT.)

F	G
F	G

½" x 5" x 24" (.8 SQ. FT.)

H	H

BASE

I started work on the Stationery Box by building the base. The base consists of a ¼" plywood panel in a mitered frame. To be sure the panel fit snugly in the frame, I made the frame first, and then cut the panel to fit.

CUT PIECES. To make it easier to work with the pieces, I began by rough-cutting the **front, back (A)** and **sides (B)** to 1¼" wide and a little longer than needed, see Fig. 1.

CUTTING THE GROOVE. Next, cut a groove along the inside edge of each piece to accept the ¼" panel. But you don't cut a ¼" groove. Instead, cut it the thickness of the saw blade, see Fig. 2. This way it fits a tongue cut on the edge of the panel, and holds the panel flush with the top of the frame, refer to Fig. 8b.

Locating the groove on the frame pieces is tricky, because ¼" hardwood plywood is rarely ¼" thick — it's usually less. So I used the plywood itself to help position the rip fence to cut the groove, see Fig. 2.

CHAMFER THE EDGE. Next, rout a ⅛" chamfer on the top outside edge of the frame pieces using the router table, see Fig. 3.

Finally, miter the frame pieces to finished length, see Fig. 1.

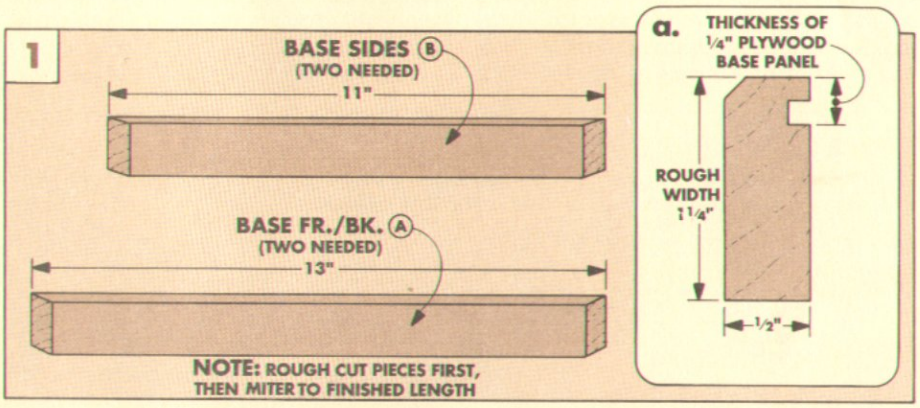

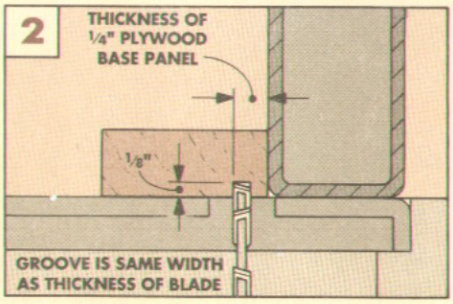

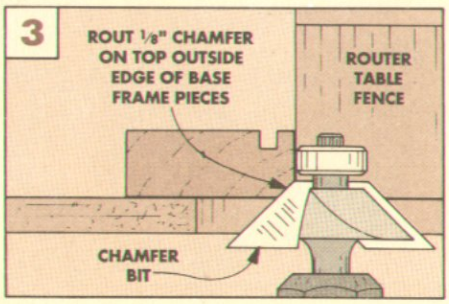

BASE CONTINUED

With the pieces mitered to finished length, the next step is to create the look of feet on the corners of the assembled box, refer to Fig. 8. To do this, I cut out an area on the bottom edge of the base pieces.

"CUT-OUTS." To make the "cut-outs," first drill a hole at each end of the cut-out location. I wanted to be sure that the holes were positioned uniformly on all the pieces, so I set up a fence and stop block on my drill press, see Fig. 4. To do this, mount a ¾" bit in the chuck. Then position the fence ¾" from the centerpoint of the bit. Next, clamp a stop block to the fence 2⅜" from the center of the bit, see Fig. 4a.

Now, with the *top* edge of the workpiece against the fence, bore a hole at one end of the cut-out. Then flip the piece end for end, and onto the opposite face. And, with the top edge of the workpiece against the fence, bore the other hole.

Shop Note: To prevent chipout when boring, use a backing board under the workpiece, see Fig. 4a.

After boring the holes, rip the pieces to final width (¾") on the table saw, see Fig. 5. Then, to complete the cut-out, draw a line connecting the tops of the holes, and cut along that line with a band saw or sabre saw to remove the waste, see Fig. 6.

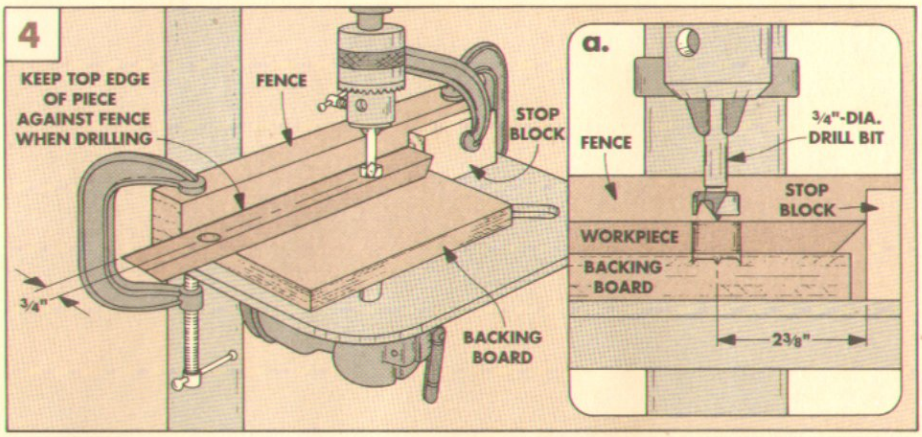

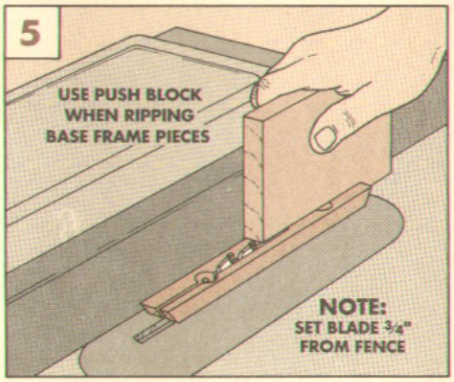

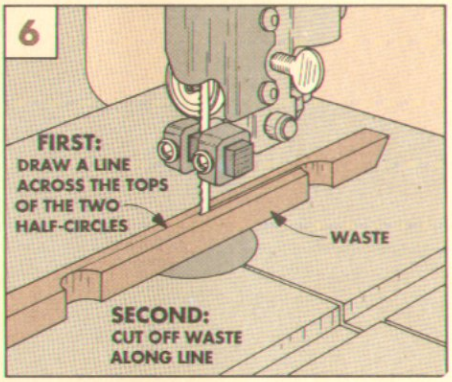

BASE PANEL

With the base pieces finished, the next step is to cut a plywood panel to fit inside the mitered pieces.

CUT TO SIZE. The trick is to determine the *exact* size of the panel. To do this, measure the length of the grooves in the base pieces, see Fig. 7. Where do you measure to? Since the ends of the pieces are mitered, the bottom of the groove is longer (by about ¼") than the groove is on the inside face of the base pieces, see Fig. 7a.

So cut the panel to this longer length. Mine is 10¼" wide and 12¼" long.

RABBET. With the panel cut to finished size, you can rabbet the top edge to create a tongue that fits into the groove in the base pieces, see Fig. 8b.

Shop Tip: I used a scrap piece of the same plywood when setting up the router table. Sneak up on the depth until the tongue just fits the groove, see Fig. 8a.

GLUE-UP. After the panel is rabbeted, you're ready to assemble and glue-up the base. Dry fit the pieces first to be sure of a snug fit all around. Then apply glue in the grooves and to the mitered surfaces and assemble the pieces.

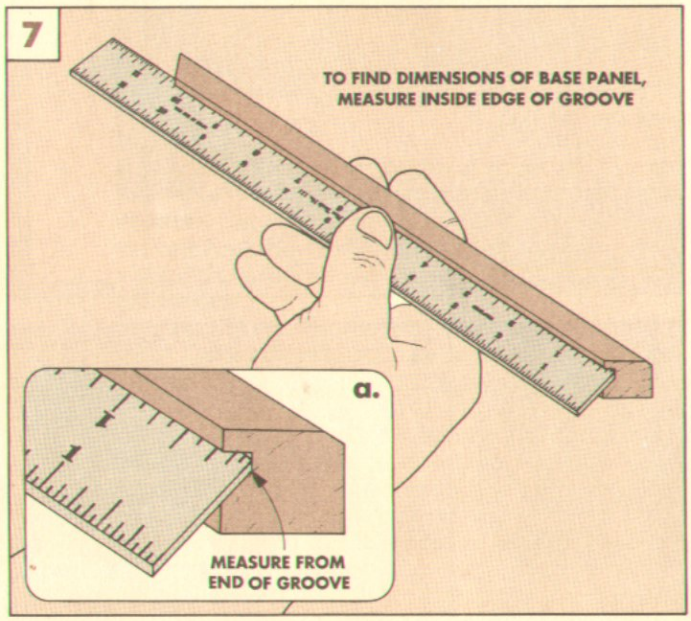

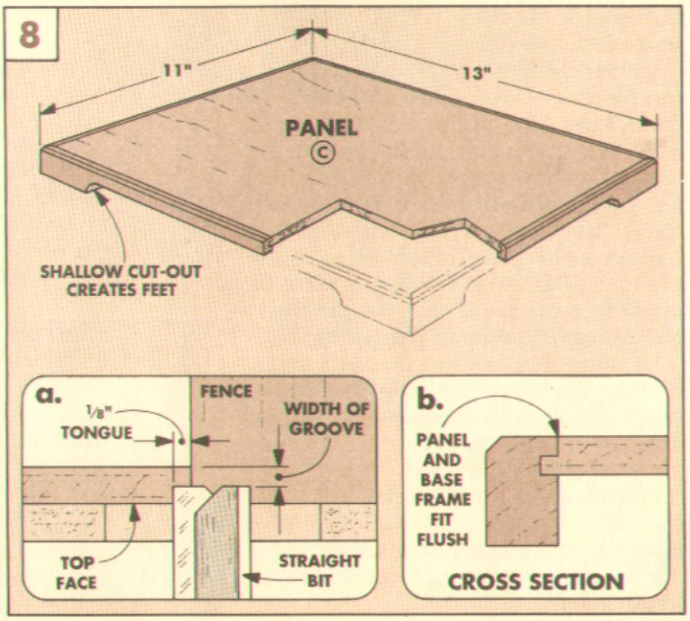

SIDES

Once the base was finished, I began work on the box sides. The sides are made of ½"-thick stock joined with dovetail joints.

Shop Note: If you had to do some "fitting" to get the miters on the base pieces tight, the length of the pieces may be shorter than the dimensions in the drawing. So, to be sure the corners of the assembled sides line up with the mitered corners on the base, use your assembled base to determine the length of the box sides.

To do this, measure the length and width of your assembled base. Then subtract ½" from these dimensions to get the length of the box sides and the front and back pieces.

Now, cut the **front, back pieces (D)** and two **side pieces (E)** to final size, see Fig. 9.

LAYOUT. After cutting the sides to length, check that the stock is square and that it's all exactly the same thickness. Then the dovetails can be laid out on the ends of all four pieces. (For more on laying out and cutting dovetails, see the article on page 24.)

Start by marking the thickness of each piece (the baseline) near the ends of all the pieces. Next, lay out and cut the pins on the ends of the front and back pieces (D), see Fig. 9a. After cutting the pins, you're ready to lay out the tails on the ends of the sides (E). To get a tight-fitting joint, I use the finished pins as a template to lay out the tails, rather than the dimensions in the drawing.

HINGE MORTISE. After the work of hand-cutting the dovetails, you'll probably want to get right to assembly. But there are three cuts that are easier to make before the box is assembled: two hinge mortises on the top of the back piece, and a finger relief on the outside of the front piece, refer to Fig. 12.

To cut the mortises for the hinges, first lay out the position and depth of the mortises on the top edge of the back piece, see Fig. 10. The depth of the mortise should equal the thickness of the knuckle on the hinge.

Then nibble out the waste with repeated passes over the table saw blade. Or, cut the sides of the mortises with a hand saw and remove the waste with a chisel. Note: Use a hinge to check the width and depth of the mortises as you work, see Fig. 10.

FINGER RELIEF. To rout the finger relief in the top outside edge of the front piece, I used a ⅜" cove bit mounted in the router table, see Fig. 11a. I laid out the size of the cove on the workpiece, and then used those lines to help position stop blocks on the router table fence, see Fig. 11.

With the top of the piece down on the table, plunge the *outside* face against the router bit and fence, see Fig. 11a. Then, to establish the cove, move the workpiece back and forth over the bit and between the stop blocks on each end.

GLUING-UP. There are two gluing steps at this point: the first is gluing the box sides together; the second is gluing the assembled box sides to the base.

To start, apply a small amount of glue to the inside faces of the dovetail joints. Then assemble the box, making sure the joints are tight. (See the box above for a tip on clamping dovetails.) Finally, check for square by placing a try square into the corners.

GLUE BOX TO BASE. When the glue in the dovetails has dried, you can glue the box to the base. To do this, apply glue to the bottom edges of the box. Then center the box sides on the base and press the sides down firmly. Clamp the sides to the base to close any gaps along the glue line, see Fig. 12.

CLAMPING BLOCK

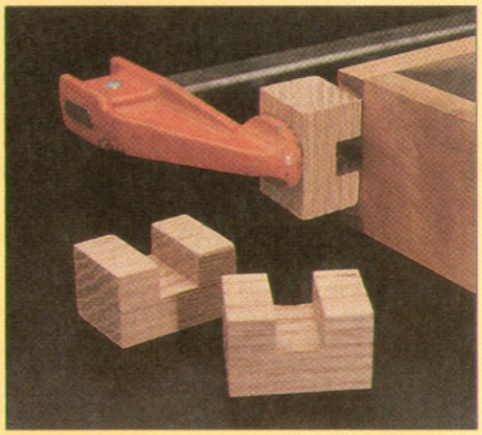

These little dovetail clamping blocks apply pressure just where it's needed — only on the tails. To make them, cut the "feet" of the blocks slightly narrower than the width of each tail.

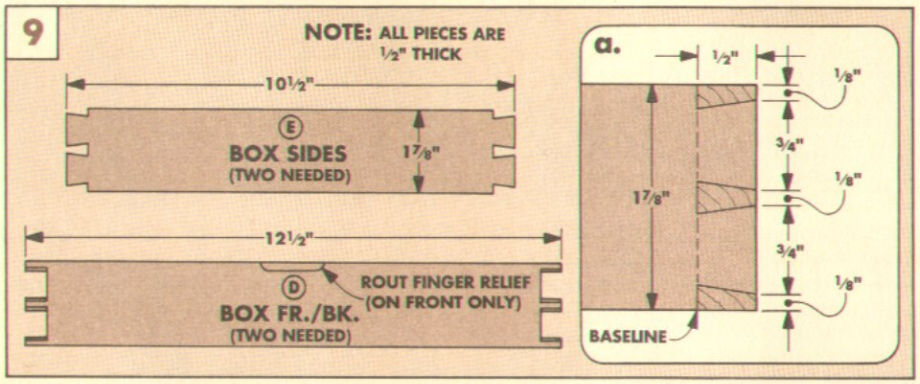

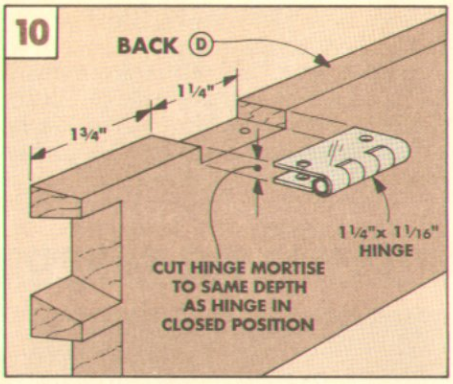

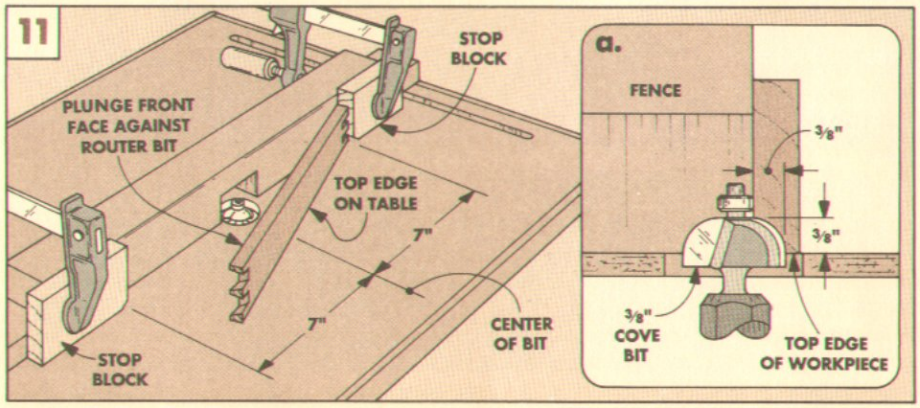

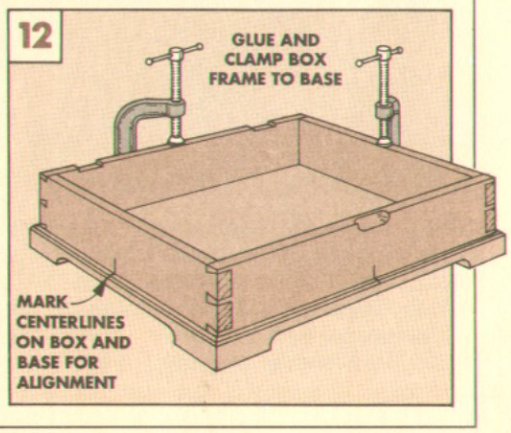

LID

After the sides and the base are glued-up, you can start work on the lid. The lid is a frame and panel assembly like the base. But there's an important difference. The lid panel is solid stock (not plywood), and requires some special design considerations. (See explanation on the opposite page.)

FRAME. Begin work on the lid by cutting the **frame front, back (F)** and **sides (G)** to finished width and thickness. Then miter the pieces to length, see Fig. 13.

Next, to form an edge profile, first round over the top outside edge using a 3/8" round-over bit, see Fig. 14. Then, rout a 1/8" chamfer on the outside bottom edges, see Fig. 15.

SPLINED MITERS. To strengthen the mitered corners of the frame, I added splines to each of the joints, see Fig. 13a. Since the frame pieces are small, I built a jig to cut mortises for the splines on the router table. For more on this jig, see page 17.

PANEL. Now work can begin on the **panel (H)**. Start by gluing-up an oversized blank of 1/2"-thick stock (roughly 10" x 12"). I used cherry with a highly-figured grain pattern.

To determine the finished dimensions for the panel, measure the opening in the dry-assembled frame, see Fig. 16. Then add 1/2" to the length and the width (to fit a groove in the frame). Now cut the panel to size.

Next, rout a 1/8" chamfer around the top edge of the panel, refer to Fig. 16a.

DOUBLE GROOVE JOINT. I used a double groove joint to hold the panel in the frame. This joint allows it to expand and shrink with changes in humidity, see Fig. 16a. For more on this joint, see the opposite page.

FINISHING-UP. Once all the pieces are cut and shaped, you can glue-up the lid. Finally, install the hinges, see Fig. 16a. Position the hinges on the lid so the lid overlaps the box sides evenly (about 1/8" all around).

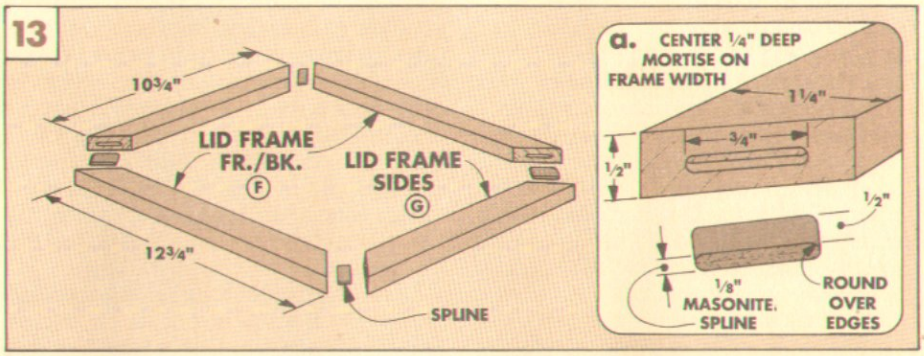

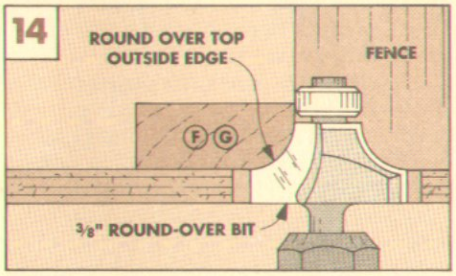

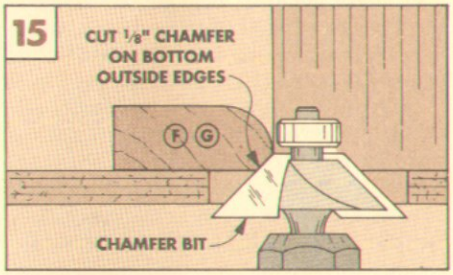

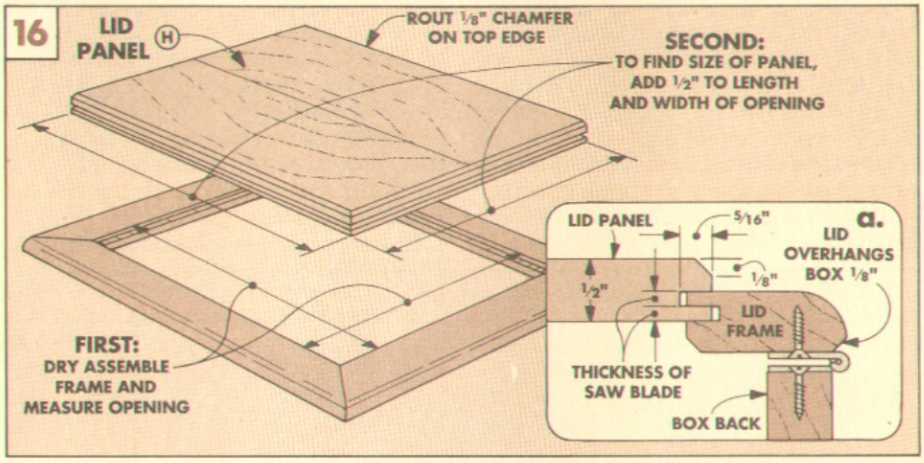

OPTIONAL LID SUPPORT

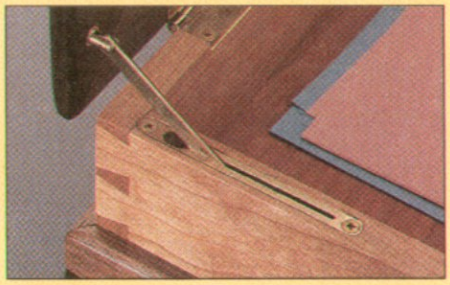

Even though the Stationery Box doesn't require a lid support, I used a neat little brass support to hold the lid open, see photo.

The support fits in a 1/4"-wide by 2 7/8"-long mortise on the top edge of one side of the box, see drawings at right. I cut the mortise by drilling a series of holes on the drill press. And then cleaned-up and straightened the edges of the mortise with a chisel.

The hanger is hinged on the end of a 1/4"-diameter pin that fits into a hole in the lid. (Complete measurements for mounting are included with the lid support, see page 31.)

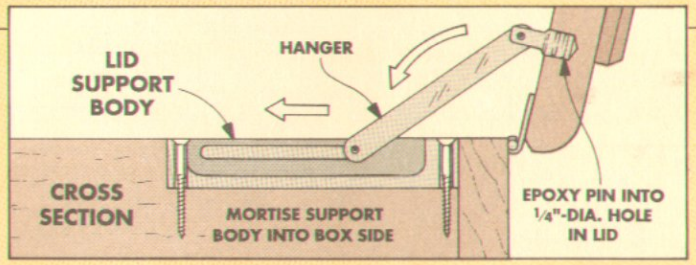

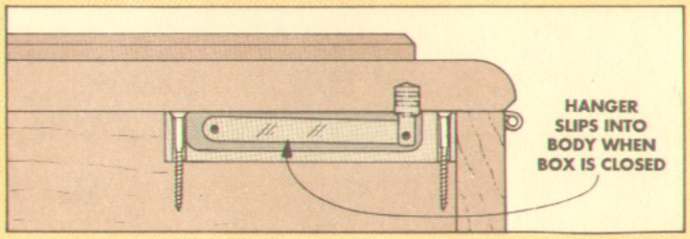

DOUBLE GROOVE
FRAME & PANEL JOINT

Because the edges of the panel are exposed, I used a solid wood panel in the lid of the Stationery Box. This meant the panel had to be joined to the lid frame in a way that would allow the panel to expand and contract inside the frame with changes in humidity.

The joint I used is an interlocking double groove joint. It's made by cutting grooves in both the frame and the panel. The grooves are positioned to leave tongues that fit in the opposing grooves, see photo at right.

By cutting this joint near the top of the frame, the panel will stand proud of the frame when the parts are assembled.

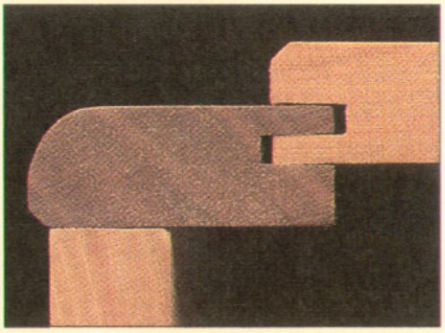

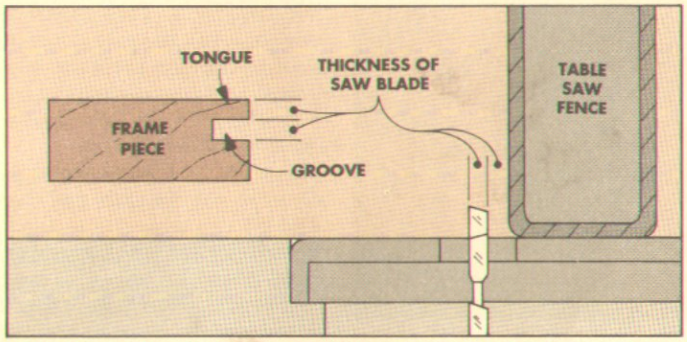

1 *To make a double groove joint, start with the frame pieces. In this example, the thickness of the tongue and the width of the groove are the same thickness as the saw blade (1/8"). So set the rip fence one blade's width (1/8") from the inside of the blade.*

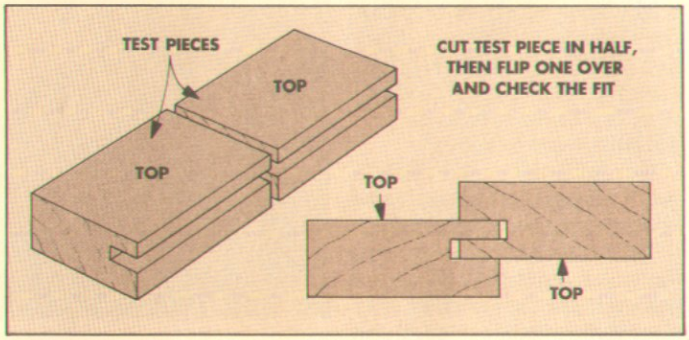

2 *Now cut a groove in a test piece. Then cut the test piece in half, turn over one of the pieces, and try the joint. If the tongues are too thick to fit in the grooves, move the fence closer to the blade. If the fit is too loose, move the fence away from the blade.*

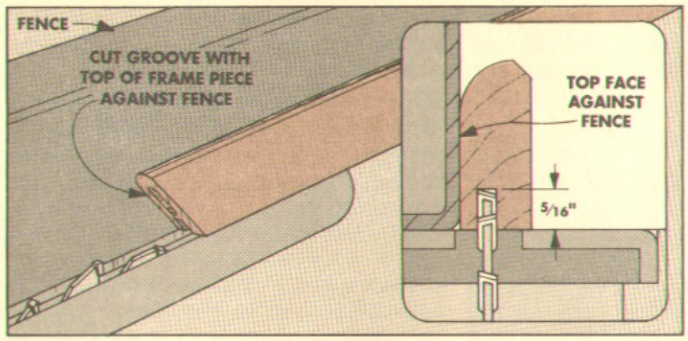

3 *The next step is to set the depth of the blade and then cut the groove in the frame pieces. The tongue should fit in the groove with room to expand. In this example, the blade is set to cut 5/16" deep. Note: The top face of the frame is against the fence.*

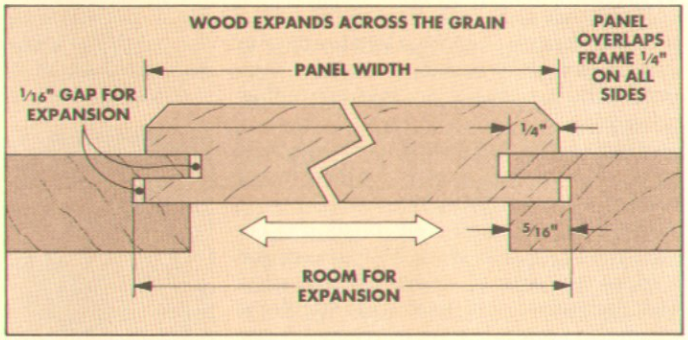

4 *A solid wood panel will expand and contract across the grain with changes in humidity. So a panel should be sized slightly smaller than the distance between the grooves in the frame. Here, the panel can expand 1/8" (1/16" on each side).*

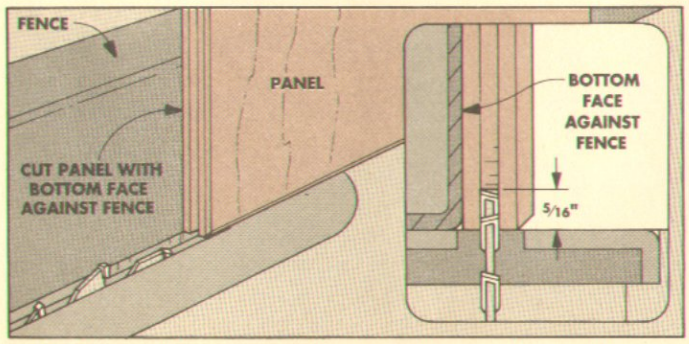

5 *Now, cut the groove in the edges of the panel using the same set-up as you did with the frame pieces. Only this time, place the bottom face of the panel against the fence. This way, the panel will stand proud of the frame when assembled.*

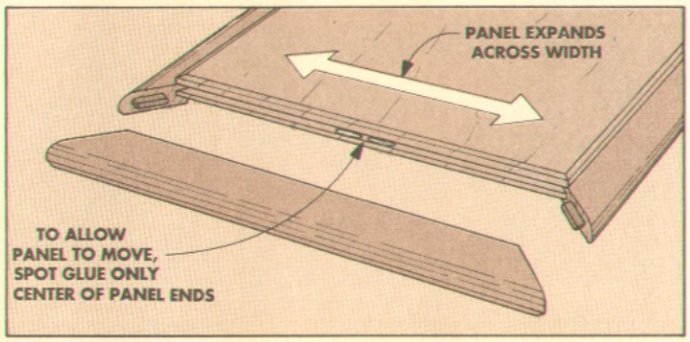

6 *With the grooves cut in all the pieces, the frame and panel can be assembled. To do this, apply glue to the mitered ends of the frame, but not in the grooves. To keep the panel in place, put a couple of dots of glue only near the center of each end of the panel.*

Hand-Cut Dovetails

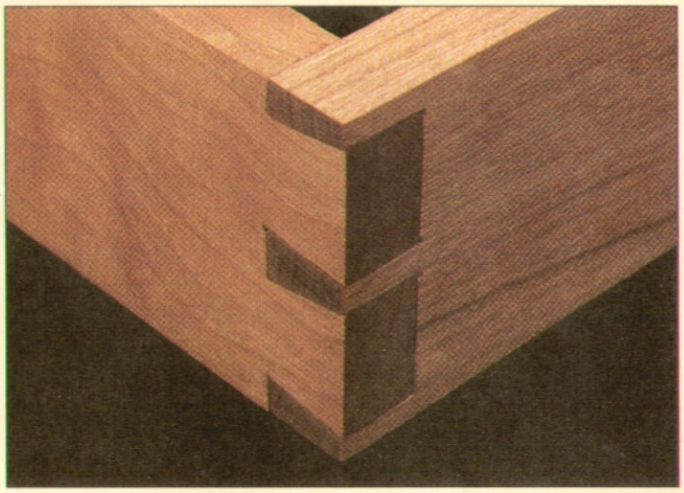

Dovetails exhibit two qualities not often found together, strength and beauty. That's probably why they are among the most admired joints in woodworking.

The shape of the joint is a classic example of form following function. They weren't originally intended to be pretty. The shape is born of function, namely to hold the pieces together.

Dovetails date back quite a ways. There are examples of dovetails on the wooden coffins of Egyptian pharohs, several thousand years B.C. Since the glue in those days was not very strong, dovetails provided the mechanical stength to hold the sides of the coffins together.

It's only recently that dovetails were incorporated into the design of a project for decoration (and to show off craftsmanship).

With modern glues, a dovetail is a strong glue joint because there's a lot of surface to glue. A typical dovetail joint has more than double the surface of the same size butt or miter joint.

MECHANICAL STRENGTH. But the real value of a dovetail joint is its mechanical strength. It stays together because the sides of the pins and tails are cut at opposing angles, see Fig. 1. These angled sides act like wedges — opposing wedges — that interlock. In practice, this means that the joint is strong because it can only be opened one direction — the opposite of the way it was put together.

If there were no "wedges," the joint would rely on glue alone for strength. What you'd have is a box joint that could slip apart easily if the glue failed, see Fig. 2.

PINS AND TAILS. The interlocking nature of a dovetail joint is created by cutting tails on one piece and pins on the other, refer to Fig. 1. But which are the pins and which are the tails? The best way to answer that is to look at a dovetail joint that's separated, see the drawing below. When viewed from the face of each board, the tails look like doves' tails. And the pins look like wedge-shaped fingers.

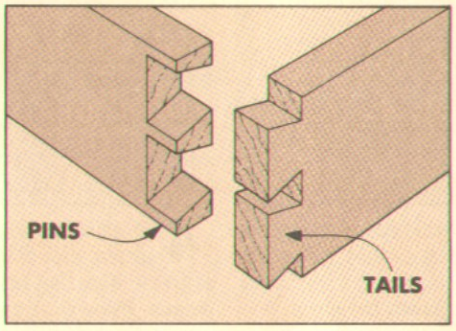

STRESS. The combination of these two produce a joint that can only be opened in one direction, see Fig. 1. This makes it ideal for applications that take a lot of abuse (like the front of a drawer), or have to support a lot of weight (like the bottom of a cabinet), see Fig. 3.

So how do you determine where to put the pins and the tails? There's an easy rule. Find the sides that will be under stress when the box is in use, and cut the pins on those sides.

For example, the pins are cut on the front of a drawer because, in opening the drawer, you're constantly tugging on the front piece, see Fig. 3. The joint can't be pulled apart in that direction, even if the glue were to fail.

Another example would be a hanging cabinet with the weight of the contents resting on the bottom of the cabinet, see Fig. 3. If pins are cut on the bottom, the tails will wedge in place against the pins and hold the bottom on tight.

JUST FOR LOOKS

Aside from the practical consideration of mechanical strength, there's one other situation in which dovetails are used — for decoration. For example, I used dovetails on the Stationery Box on page 18. In this case, the sides won't be stressed in normal use. So where you put the pins and tails depends on how you want the box to look — with the joints serving mostly as decoration.

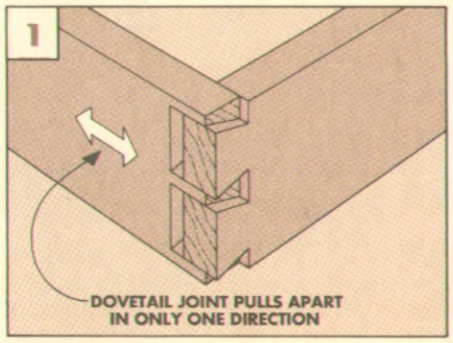

The angled sides of the pins and tails interlock to create a very strong joint that can only be disassembled in one direction.

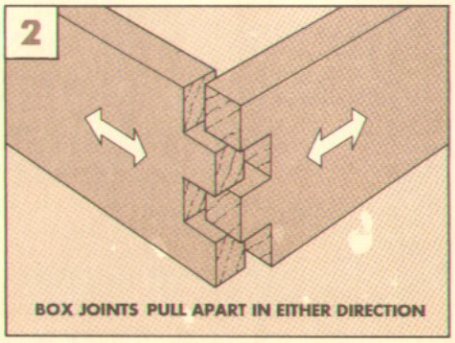

Unlike a dovetail joint, box joints have little mechanical strength. So box joints rely on glue for much of their strength.

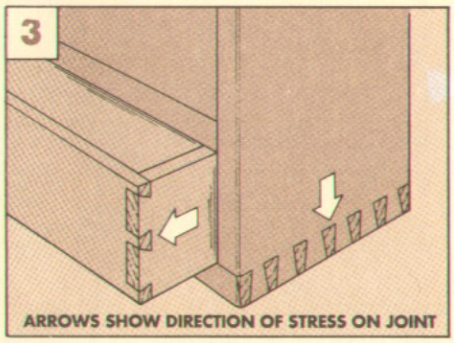

Pins are always placed where the stress is greatest, such as on a drawer front or on the bottom end of a hanging cabinet.

GETTING STARTED

Laying out and cutting dovetails by hand doesn't require any special or unusual tools. To lay out the dovetails, you need only a sharp pencil, a ruler, a square, and a bevel gauge. (Or, you can make a simple gauge out of scrap, see page 28.)

To cut dovetails, you need only a small backsaw or dovetail saw. I like to use a Japanese backsaw, called a dozuki. The set on the teeth is very narrow which makes starting a cut in end grain easy. But any saw with narrow set teeth will do.

I also use a coping saw and a sharp chisel to clean out the waste between the pins and the tails. (This is all shown in the step-by-step article on the next couple of pages.)

STOCK PREPARATION

The first step in preparing to cut dovetails is to cut the sides of the box to finished length. What we're showing here are through dovetails, which means the pins and tails go all the way through the adjoining pieces.

In this case, all the pieces are cut to the full length or width of the finished project. Don't subtract the thickness of the adjoining piece, as you would with a butt joint, for example.

SQUARE-UP STOCK. When making dovetails it's important to square-up the stock. This sounds pretty obvious, but if the ends aren't exactly square to the edges and sides, you will have a lot of trouble trying to get the joints to fit.

Another thing to check for is the thickness of the stock. Each piece should be consistently thick from end to end, and from edge to edge. This may seem obvious, too. But slight differences in thickness will drive you crazy when it comes time to fit the joints.

ORIENTATION. I start by arranging all the pieces on the bench as they will appear in the final project. Set up the pieces on edge with the adjoining corners together, see Fig. 4.

Then mark the top edge and the outside face of each piece. Finally, label each corner with a letter.

LAYOUT

Now you're ready to start laying out the pins and tails.

PIN/TAIL RATIO. I think dovetail joints look best if the tails are larger than the pins. So as a general rule, I use a ratio of at least 1:4.

For example, if the narrowest part of the pin (as viewed from the outside face) is ¼", then the tail should be 1" wide at its widest point, see Fig. 5. (This is for evenly-spaced dovetails. More on unevenly-spaced dovetails later.)

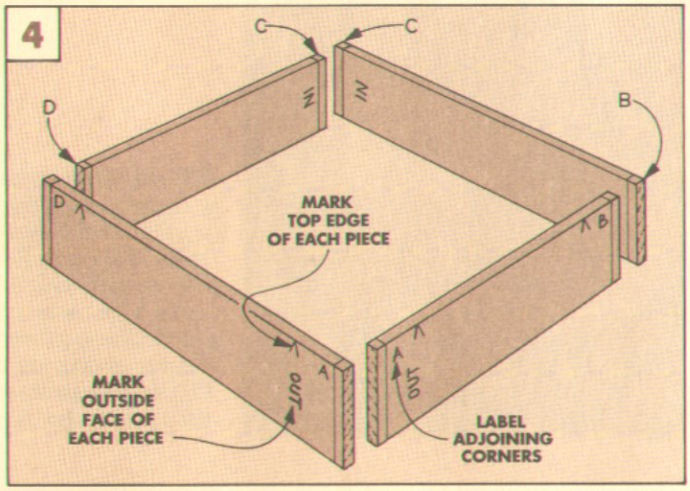

HALF-PINS. Dovetail joints are laid out with a half- pin on the top and bottom (or ends) of the joint, and one or more full pins and tails in between.

I begin with the half-pins on the ends. Don't be misled by their name. They're called half-pins because they're angled on only one side, not because they're half the width of the full pins. Make them the same width as the full pins. This is for appearance to some extent, but also to avoid splitting when the joint is assembled.

FULL PINS. Next, I lay out the lines that will indicate the centers of the full pins, see Fig. 6. Keep in mind the 1:4 ratio. It rarely comes out even, so I do a little adjusting (usually to the width of the tails) until it works out and looks nice.

The centerlines only indicate the position of the pins. Next, draw lines on both sides of the centerline to indicate the full width of the pins, see Fig. 7. There is one practical consideration here. The width of the pins should not be narrower than your narrowest chisel. It's nice to make the pins very narrow (especially if you want to show off a little). But when you cut the tails, they are separated by exactly the width of the pins. (This is the waste area between the tails.) If that width is smaller than your chisel, it's very difficult to chop it out. I usually make the pins ¼" wide, or just a smidgen wider.

VARIATIONS. In most cases, dovetails are laid out uniformly, all the tails are one size, all the pins are another, see Fig. 5. But one of the advantages of hand-cutting dovetails is that you can vary the width to create designs that won't look like they were incrementally cut with a machine.

One of my favorite variations is to lay out the tails in the center wider than the tails near the edges, see Fig. 8. It's strong, but doesn't look machine cut.

LAY OUT. One last tip for laying out the joints — use a very sharp pencil. The difference between a joint that fits well and one that needs a lot of putty as filler is less than the width of a pencil line. Try to draw crisp lines that you can see easily as you cut.

For more on how to lay out the joints, see the step-by-step articles on the next pages.

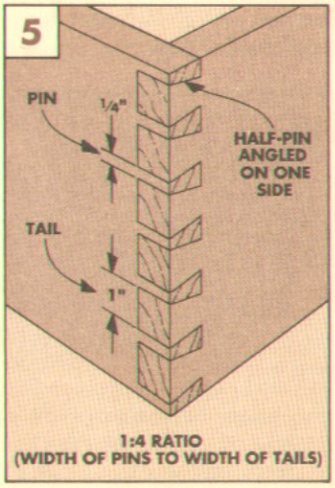

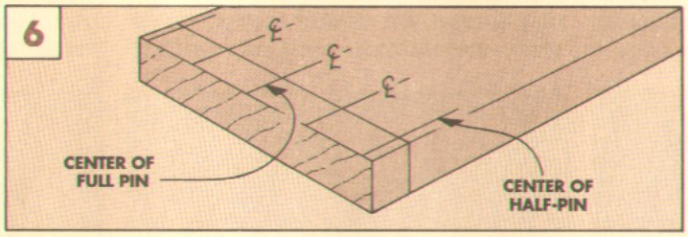

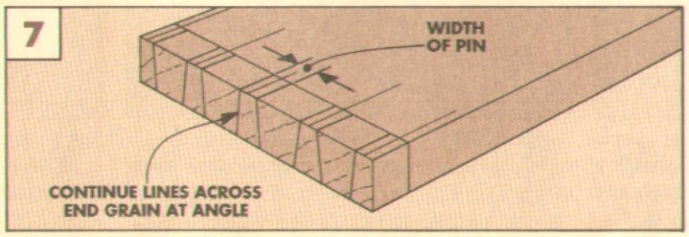

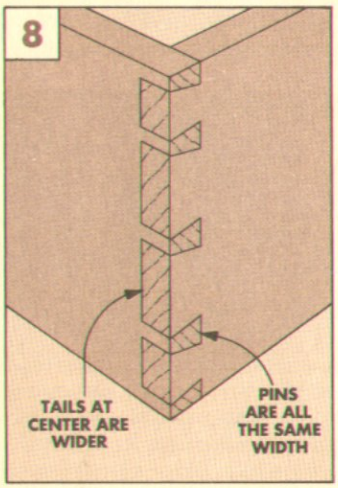

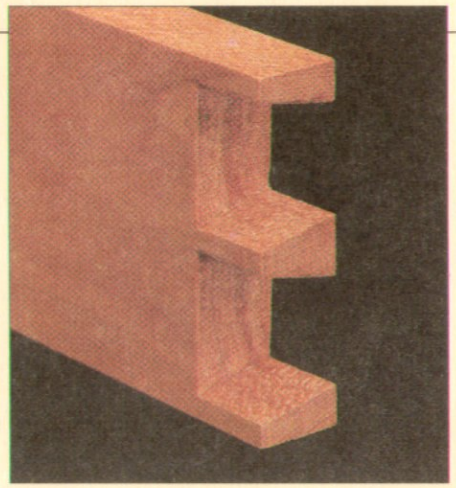

Pins

■ The first step in making a dovetail joint is to lay out and cut the pins. If you're working on a drawer, the pins are on the drawer front. On the Stationery Box, I laid out the pins on the front and back sides (see page 21).

The layout and cutting procedure is basically a three-part process. First, the pins are laid out on the stock (Steps 1 through 4). This process involves laying out the spacing of the pins on the "out" side face of the workpiece (Step 2). Then marking the angle on the end (Step 3). And finally, marking down the "in" side face (Step 4).

After laying out, the second step in the process is cutting straight down the sides of the pins with a backsaw (Step 5).

And third, the waste areas are removed. Most of the waste is cut out with a coping saw (Step 6). Then the rest is cleaned out straight and flat with a chisel (Steps 7, 8, and 9).

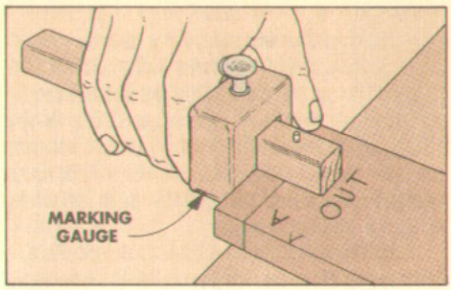

1 *First, mark the thickness of the adjoining pieces by scribing a baseline near the ends of all the pieces. (See the alternate tip on page 28).*

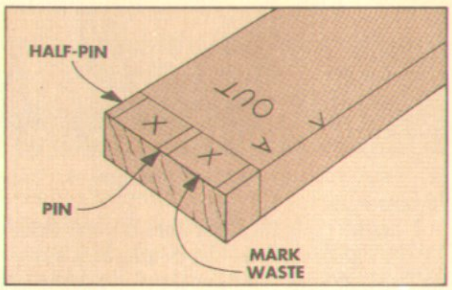

2 *Next, lay out the width of the pins on the outside face of the workpiece. Determine the spacing with a ruler. Then draw the lines square with a try square.*

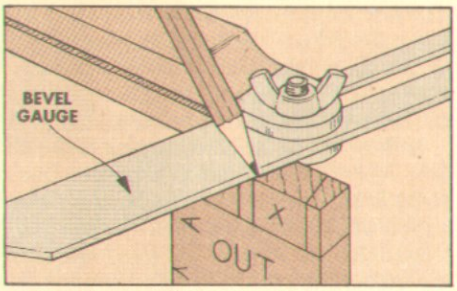

3 *Now continue the lines across the end grain with an angled line. You can draw these with a bevel gauge set at 8:1 (83°), or a shop-made gauge, see page 28.*

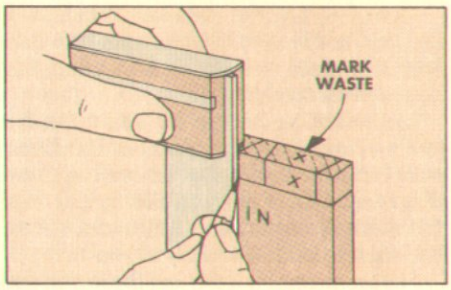

4 *Complete laying out the pins by continuing the lines down the inside face of the workpiece. Then mark an "X" on the waste areas between the pins.*

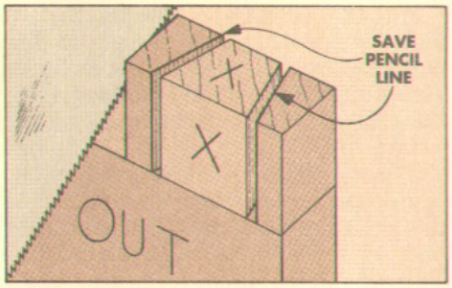

5 *The next step is to cut down the sides of the pins. Cut down to the baseline (but not through it) with a backsaw. Always cut on the waste side of the pencil line.*

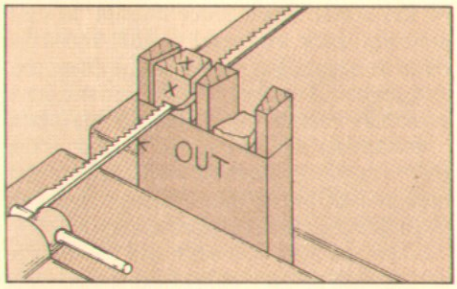

6 *After cutting the sides of the pins, remove the waste areas. Slide a coping saw in the kerf and saw out the waste, leaving about 1/8" above the baseline.*

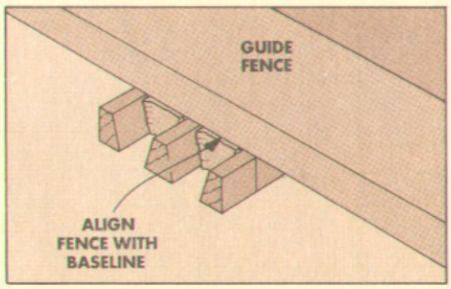

7 *Now, remove the rest of the waste with a chisel. To do this, I clamp a guide fence along the baseline to help cut a sharp line. Remember to save the line.*

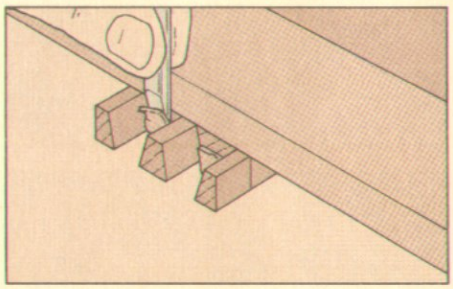

8 *With the back of the chisel against the guide fence, cut straight down — half way. Then turn the workpiece over and remove waste from the other side.*

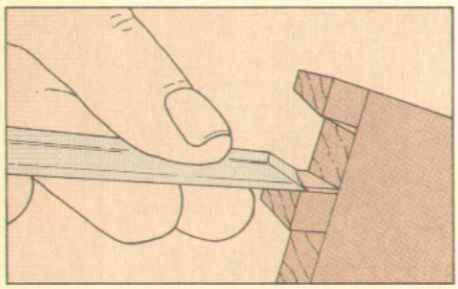

9 *Pare the sides of the pins to the pencil line, if necessary. Finally, check the end grain between the pins to be sure the shoulder is flat and square.*

Tails

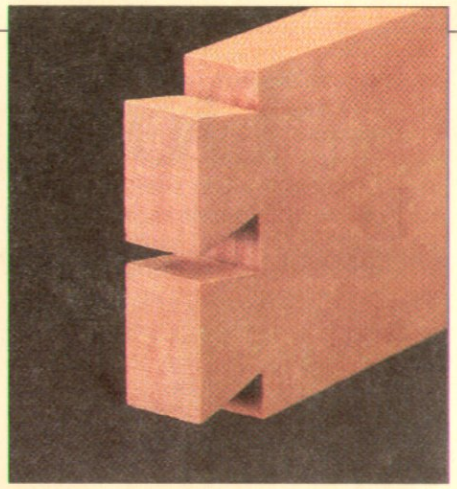

■ To get really tight-fitting dovetails, I use the finished pins as a template to lay out the position of the tails. The method shown in Steps 1 and 2 below is a little unorthodox. Typically, the workpieces are held at right angles so the ends of the pins are resting on the inside face of the workpiece to mark their position and shape.

The method I use lays out the tails on the *outside* face. This way you can carefully cut to the line on the "good" (outside) face that will show on the final project. Your lines are always there for reference as you cut. And they aren't pared off in the fitting process.

A FINAL TIP. When final fitting the joint together, never trim anything off the finished pins — do all your trimming off the sides of the tails near the inside face. These surfaces are hidden in the assembled joint. So it won't show if you take off a bit too much.

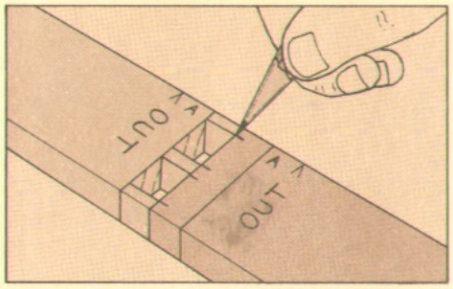

1 *To lay out the tails, use the pins as a template. Lay the pieces end to end and extend the narrow side of the pins onto the workpiece for the tails.*

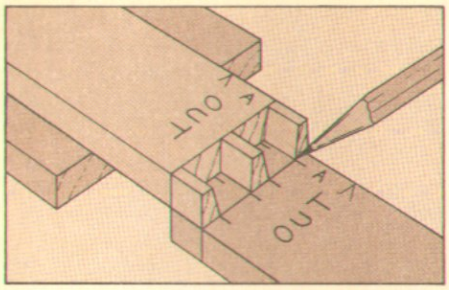

2 *Next, to mark the width of the tails at the baseline, set the pins on top of the tail stock. Then mark at the corners of the wide part of the pins along the baseline.*

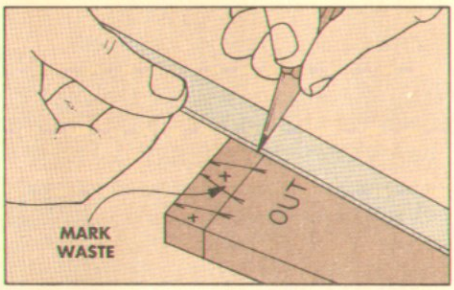

3 *Draw the angled sides of the tails by connecting the marks with a straightedge. Then, continue the lines across the end grain with a try square.*

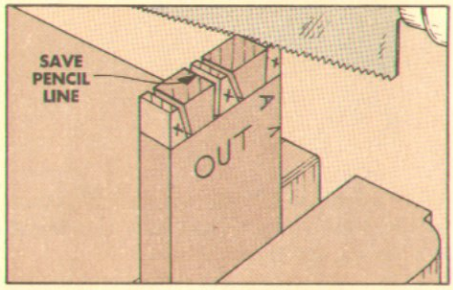

4 *Cut out the waste areas between the tails. Start by cutting a shallow kerf on the waste side of the line. Then tilt the saw and cut down to the baseline.*

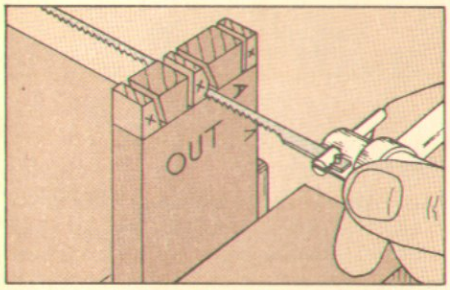

5 *Remove most of the waste between the tails with a coping saw. Don't saw off the half-pin waste yet. These small parts are trimmed off later with a chisel.*

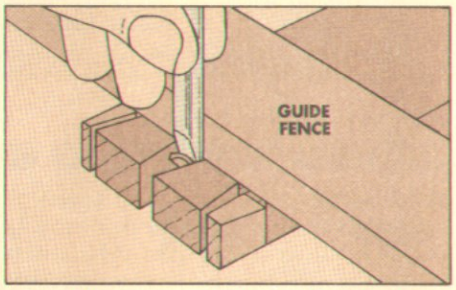

6 *Clamp a guide fence along the baseline and chisel out the waste between the tails. Then, to remove the half-pin ends, make a small V-cut along the baseline.*

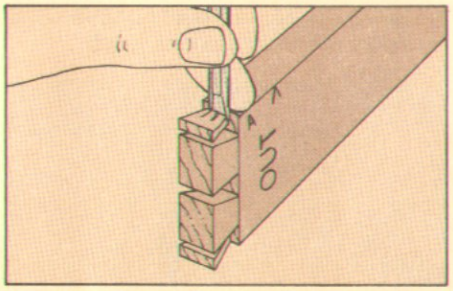

7 *After cutting a V-cut on both faces with a chisel, position the workpiece on edge. Then slice down the baseline with a chisel to pop off the waste.*

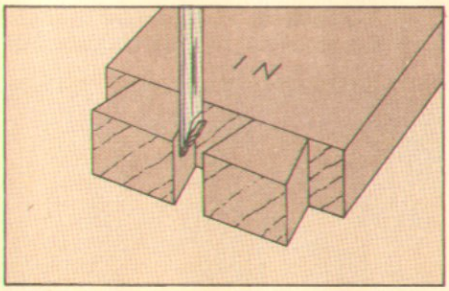

8 *The next step is to pare the sides of the tails square to the face. But save the pencil line. If you cut into the line, there will be a gap in the assembled joint.*

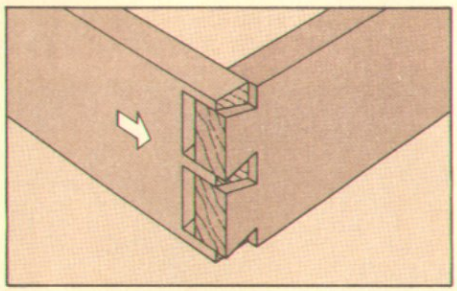

9 *Fit the pins and tails together with hand pressure only. If they don't go together, pare a little off the sides and inside face of the tails only — not the pins.*

Dovetail Jigs & Tips

SHOP-MADE DOVETAIL GAUGES

■ The most common way to lay out angles for dovetails is with a sliding bevel gauge, see Step 3 on page 26. There are also some accurate, though expensive, dovetail gauges that you can buy through tool catalogs. But here's a gauge that you can make from scrap in just minutes.

ANGLES. The first step in making the gauge is to decide the angle of the dovetails. A 6:1 ratio is generally considered best for softwoods; an 8:1 ratio for hardwoods.

Once you've decided on the angle, cut a scrap of plywood or Masonite to either 2½" square (for a hardwood gauge) or 3" square (for a softwood gauge), see Fig. 1. Take care to make the corners exactly 90°.

Now trim the desired angle off one side of the square, see Fig. 1. Note: Don't worry if the angle is slightly off. Since you're using this angle to lay out all the pins, the angles on all the pins (and consequently the tails) will be consistent.

USING THE GAUGE. To use the gauge to lay out pins, first draw the narrow side of the pins on the outside face of the stock using a ruler and try square. Now lay the stock flat on a bench and hold the gauge against the end grain of the board and the top of the bench, see Fig. 2. Then draw the angled pin lines on the end grain.

BASELINE LAYOUT

The first step in laying out dovetails is to lay out baselines near the ends of all the pieces. These lines indicate the thickness of the adjoining pieces of stock. The baseline is usually scribed with a marking gauge. But if you don't have a marking gauge, you can still do an accurate job of laying out a baseline.

To do this, use a piece of stock the same thickness as the adjoining piece. Set the workpiece and the scrap on a flat surface, and then draw the baseline all the way around the workpiece using the scrap as a guide. Note: Use a sharp pencil — thick or fuzzy baselines are hard to align to.

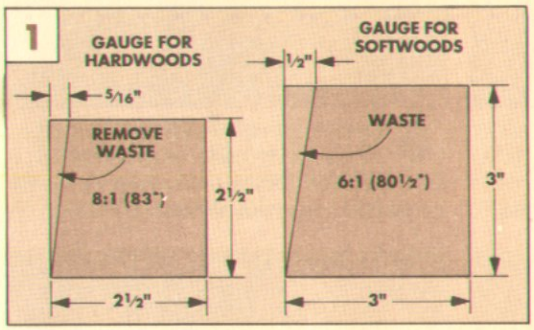

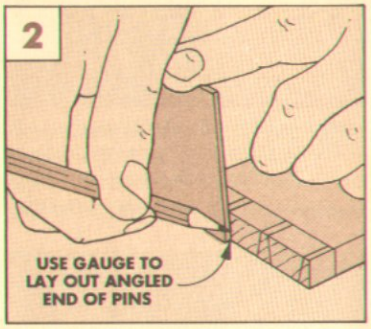

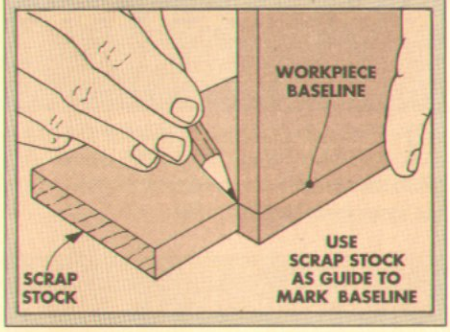

DOVETAIL CUTTING GUIDE

■ To cut tight-fitting (good-looking) dovetails, you need to be able to accurately cut the angled sides of the pins and tails with a hand saw. And this can be tricky, especially if you don't use a hand saw very often. To get around this problem, it helps to have a cutting guide — a little block that's used to get the saw started at the desired angle.

START WITH THE BLOCK. To make a guide to cut dovetails on ½"-thick stock, start with a 1¼" by 1¼" block of hardwood (I used hard maple), about 10" long. This is obviously a lot longer than you need for a cutting guide, but the longer block is easier and safer to work with. It can be cut shorter later.

GROOVE TO MATCH STOCK. Now cut a groove ½" wide (or the same width as the thickness of the stock) and 5/16" deep along three edges of the block, see Fig. 1. These grooves fit over the workpiece.

CUT TO LENGTH. Then, cut the guide to length at an angle, (83° for hardwood or 80½° for softwood). Since you'll have some grooved stock left over, you may want to cut two blocks, one at each angle.

USING THE GUIDE. To use a guide block, set the groove in the block over the edge of the workpiece where you want to make a cut, see Figs. 2 and 3. Now start your cut, keeping the saw blade flush against the block until the kerf is well-established. Then you can remove the block, or use it to complete the cut if your saw blade is wide enough.

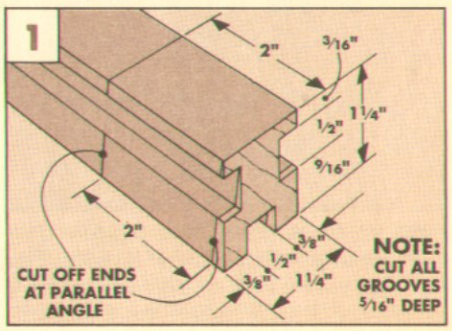

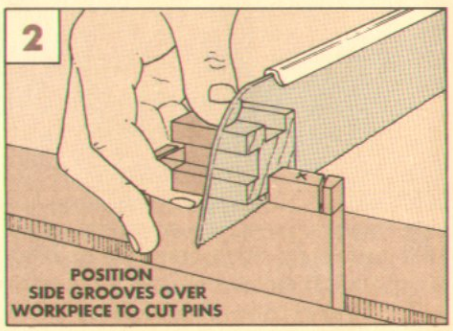

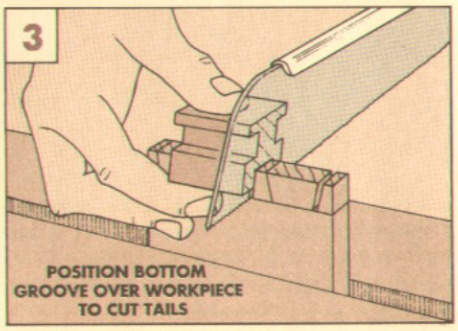

BASELINE JIG

■ There's one last step after cutting away most of the waste between the pins or the tails with a coping saw. You need to chop down along the baseline with a chisel to clean out the rest of the waste. Cutting a crisp, clean baseline is part of the secret to completing a tight-fitting joint.

To provide a straightedge for aligning the chisel to the baseline, I built a baseline jig. It mounts in a vise and holds the workpiece securely in place.

JIG PARTS. The jig consists of a base with a guide fence bolted on top, refer to Fig. 2. And a cleat is screwed to the front edge to hold the jig in a vise. (I used hard maple for all of the pieces — it stands up to the hard chopping action of a chisel.)

BASE AND GUIDE FENCE. Start on the base and guide fence by cutting two pieces of ¾"-thick stock to final size, see Fig. 1.

Next, to accept the ⅜" carriage bolts that hold the jig together, drill two holes through both pieces. I drilled these holes a little oversized (7/16" dia.) so the guide fence will easily ride up and down over the threads of the bolts. Also, the holes in the base should be counterbored on the bottom face to accept the heads of the carriage bolts.

Shop Tip: To keep the pieces aligned while drilling, I stuck them together with double-sided carpet tape.

VISE CLEAT. After the holes are drilled, cut a cleat to fit the front edge of the base, see Fig. 2. The cleat provides a lip to clamp the jig into the vise while chopping.

ASSEMBLY. To assemble the pieces, first drill and screw the cleat to the base, see Fig. 2. Then, attach the guide fence to the base with two bolts, nuts, washers, and wing nuts. (For sources of plastic wing nuts and the rest of the hardware needed to make the baseline jig, see page 31.)

USING THE JIG. After completing the jig, I clamped it in the vise at the end of my workbench.

To use the jig, slide the workpiece under the fence. Then, align the baseline on the workpiece to the front edge of the guide fence, see Fig. 3. Once you're satisfied with the position of the workpiece, tighten down the wing nuts and recheck the position of the workpiece to make sure it hasn't shifted.

Now you're ready to start chopping out the waste. To do this, place the back of the chisel flat against the front edge of the guide fence, see Fig. 4. Then chop straight down on the baseline. But don't cut all the way through to the other side. Stop about halfway. (If you chop all the way through to the other side, it might chip out the bottom.)

Once the baseline is cut about halfway through all the waste on one face, loosen both wing nuts and remove the workpiece. Now clamp it in the jig with the other face up, see Fig. 5. Then, realign the baseline to the guide fence and retighten the wing nuts. To complete the dovetails, chop out the rest of the waste just as you did before.

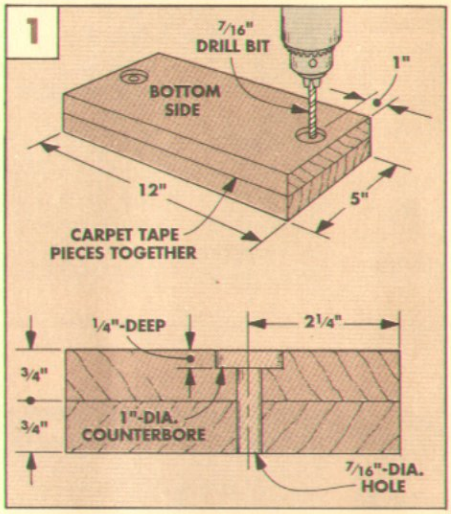

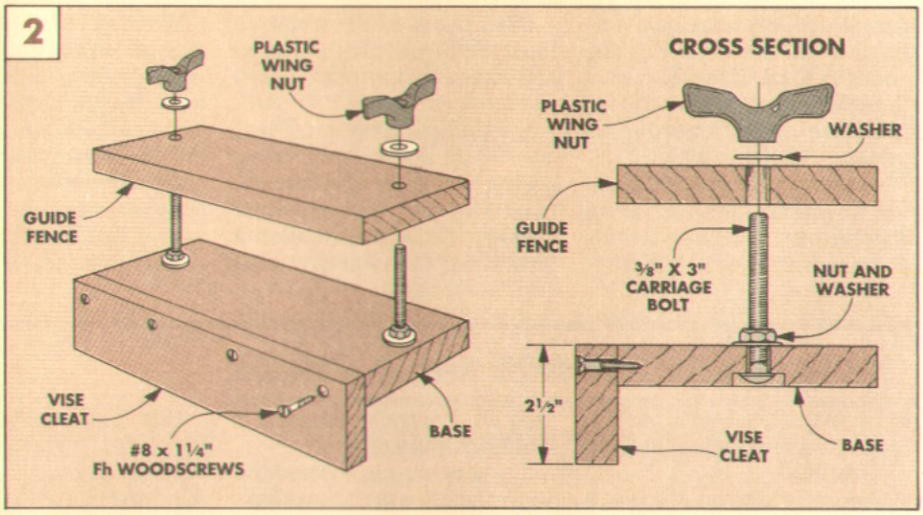

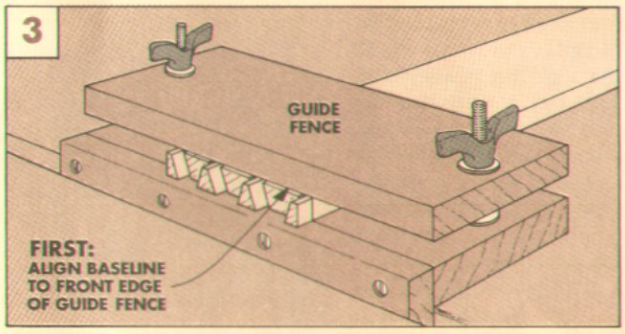

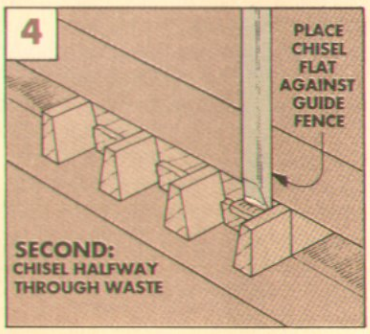

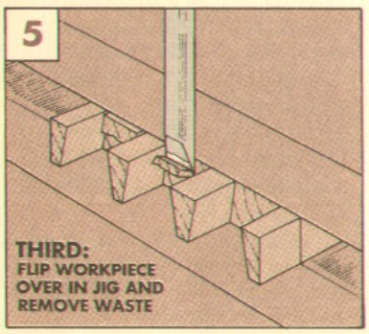

Talking Shop

DRESSING STICK

■ *I recently purchased an aluminum oxide wheel for my bench grinder. I had great success sharpening the first few chisels. But with use, the edges of the wheel have rounded over and its face isn't flat. Now it's difficult to get an even bevel on my chisels.*

What's the best way to square up a grinding wheel?

Ben Jackson
Peterborough, NH

Grinding wheels usually wear unevenly during use, developing gouges in the face (the grinding surface of the wheel) or knicks around the edge. When the face of the wheel is no longer flat, it's nearly impossible to grind a flat, even bevel on the end of a chisel. Then the face of the wheel must be dressed to get it square and to improve its grinding (cutting) ability.

DRESSING. Aluminum oxide wheels consist of tiny particles of aluminum oxide bonded together with a special adhesive. As a chisel is sharpened, the particles break away to help prevent heat build-up. As grinding continues, the remaining particles become dull and clogged with metal from the chisel.

Dressing a wheel removes these dull, caked-up particles and exposes the fresh, sharp particles underneath.

MECHANICAL DRESSER. There are several methods for dressing an aluminum oxide wheel. One is to use a mechanical dresser. (Sometimes called a "star wheel" dresser.) It consists of a long metal handle with four spur-shaped replaceable cutters attached to one end.

Mechanical dressers work fine, but I don't like the noise and flying sparks they create.

DRESSING STICK. The tool I prefer for dressing is a 24 grit silicon carbide dressing stick, see photo. (For sources of this dressing stick, see page 31.)

Using a dressing stick on a grinding wheel doesn't create much noise or vibration, and there aren't many sparks.

DRESSING A WHEEL. To use a dressing stick, position it on the tool rest and tilt it into the spinning wheel, see photo. As soon as the dressing stick makes contact with the wheel, start to slide the stick back and forth across the face of the wheel.

After a few seconds, turn off the grinder and check your progress. The face of the wheel should have fresh aluminum oxide particles exposed, with no metal build-up. The face should also be flat and the edges should be square. If not, repeat the process until the wheel is completely dressed.

A CLARIFICATION

In *Woodsmith* No. 80 we answered a question about the differences between wiring power tool motors for 115 volts and 230 volts. We received several letters from readers who wanted us to clarify the following statement: "A 220 line can deliver twice the current of a 110 volt line, when the same gauge wire is used for both."

A clearer statement is: A 220 volt *circuit* can deliver twice the *power* of a 110 volt *circuit*, when the same gauge wire is used for both.

Safety Note: As we said before, if you decide to use 220 volts in your shop or on a motor, always follow the instructions in the owner's manual very carefully, or hire a licensed electrician.

INSTALLING HINGES ON A CHEST

■ *We recently received the following letter from a retired shop teacher.*

Several years ago, I was a shop teacher in a small school system, and I often have fond memories of that experience.

A cedar chest was always a popular project with many students. And they did quite well in its construction. Except when it came time to attach the hinges for the lid.

It was important for the closed lid to be square with the chest. But no matter how carefully the students measured and attached each lid, it usually closed in a slightly crooked position.

One day we came upon the perfect solution to this problem. First, the students mounted the hinges to the chest. Then someone went down to the grade school end of the building and borrowed a small first grader.

We gave the child a pencil and a flashlight and explained to him what to do. After our small one gained enough confidence, we placed him in the chest. Then we placed the lid on the chest and aligned it to the sides in the proper position.

Our "kid-in-the-box," with illumination from the flashlight, marked the mounting holes on the underside of the lid from inside the box. The marked holes were then used to mount the lid to the hinges.

When the first grader was through, he was sent back to his classroom with a candy treat in his hand and a big smile on his face — eagerly awaiting a future cedar chest project. From then on, my students could always get their lids perfectly aligned.

Jack Ward
Bowling Green, Ohio

PROBLEM? QUESTION?

Solving a problem (or avoiding one in the first place) is part of every project. But the best solutions aren't always obvious — they often come from one who's faced the problem before.

If you have a problem, solution, question, or even a gripe, maybe we (or another reader) can help. Just write to *Woodsmith*, Talking Shop, 2200 Grand Avenue, Des Moines, Iowa 50312.

Sources

ENTERTAINMENT CENTER

Woodsmith Project Supplies is offering a hardware kit for the Entertainment Center shown on page 6. (Note: The hinges and sliding door hardware require a 1⅜" or 35mm drill bit for installation. We're offering a 1⅜" Forstner bit separately, see below.)

Entertainment Center

W781-100 Entertainment Center Hardware Kit.....$97.95
- (5) Red Oak Double Ridge Pulls, with Screws
- (24) Spoon-Style Shelf Supports, Brass
- (6) Self-Closing Concealed Hinges, with Screws
- Sliding Door Hardware for 2 Doors, with Screws and Mounting Instructions
- Rubber Door Bumpers, Self-Adhesive

Forstner Bit

W1505-315 1⅜"-Dia. Forstner Drill Bit.....$19.95

STATIONERY BOX

Woodsmith Project Supplies is offering a hardware kit for the Stationery Box on page 18.

Stationery Box Hardware

W781-200 Stationery Box Hardware Kit.....$13.95
- (1 pair) Brass Butt Hinges, 1 1/16" Open Width, 1¼" Long
- (1) Solid Brass Mortised Lid Support, with Screws and Mounting Instructions

DOVETAIL TOOLS

The easiest way to cut dovetails is with a thin kerf handsaw, see photo. **Woodsmith Project Supplies** is offering a Japanese dovetail saw (A) (also replacement blades), and a small western-style backsaw (B) (sometimes called a gent's saw). We're also offering a high quality coping saw (C) to clean out the waste between the pins and tails.

Dovetail Saws

W5006-311 Japanese Dovetail Saw, 9½" Blade Length, 21" Overall Length, .012" Thick Blade, 21 Teeth Per Inch ... $29.95

W5006-312 Extra Blade for Japanese Saw $12.95

W5006-358 Backsaw, 8" Blade Length, 13" Overall Length, 19 Teeth Per Inch $19.95

W5006-380 Coping Saw, 6¾" Blade Length..... $15.95

DOVETAIL BASELINE JIG

On page 29, we featured a jig to hold a workpiece while chopping out dovetails. **Woodsmith Project Supplies** is offering a hardware kit to build this jig. (Note: Wood is not included.)

Baseline Jig Hardware

W781-300 Dovetail Baseline Jig Hardware Kit $4.95
- (2) Plastic Wing Nuts, 3" Across Wings, Fits ⅜" Bolt
- (2) ⅜" x 3" Carriage Bolts
- (2) ⅜" Nuts
- (4) ⅜" Washers

GUIDE BUSHINGS

On page 16, we showed a technique for routing shallow recesses in the bottom of a shelf to accept spoon-style shelf supports. To use this technique, you will need a ⅝" guide bushing. You should be able to buy bushings for your router from the dealer who sold you the router.

A universal base plate with bushings to fit most popular round base routers is available from **Woodsmith Project Supplies** and the sources below.

Universal Bushing Set

W5503-106 Universal Router Guide Bushing Set.....$17.95
- (1) Plastic Base Plate That Fits Most Round Base Routers
- (4) Guide Bushings: 5/16", 7/16" Short, 7/16" Long, and ⅝" Dia.

DRESSING STICK

On the opposite page, we recommended using a silicon carbide stick to dress grinding wheels. This stick is available through **Woodsmith Project Supplies**.

Dressing Stick

W5503-202 Silicon Carbide Dressing Stick, 24 Grit.....$9.95

RABBETING BITS

Woodsmith Project Supplies has carbide-tipped rabbeting bits in two shank sizes.

Rabbeting Bits

W1514-400 ⅜" Rabbeting Bit (¼" shank) $24.95

W1512-450 ⅜" Rabbeting Bit (½" shank) $26.95

Note: These bits cut a ⅜"-wide rabbet. To cut a ¼"-wide rabbet, also order:

W1501-455 ¼" Rabbeting Bearing, 3/16" Inside Diameter, ¾" Outside Diameter.....$5.95

ORDER INFORMATION

BY MAIL

To order by mail, use the form enclosed with the current issue. The order form includes information on handling and shipping charges, and sales tax. Send your mail order to:

Woodsmith Project Supplies
P.O. Box 10350
Des Moines, IA 50306

BY PHONE

For fastest service use our Toll Free order line. Open Monday through Friday, 7:00 AM to 7:00 PM Central Time.

Before calling, have your VISA, MasterCard, or Discover Card ready.

1-800-444-7002

Note: Prices subject to change after August, 1992.

MAIL ORDER SOURCES

Similar hardware and supplies may be found in the following catalogs. Please call each company for a catalog or information.

Trend-Lines
800-767-9999
Concealed & Sliding Hinges, Forstner Bit, Shelf Supports, Guide Bushing Set

The Woodworkers' Store
612-428-2199
Concealed & Sliding Hinges, Forstner Bit, Rubber Door Bumpers, Shelf Supports, Box Lid Support & Hinges, Japanese & Dovetail Saws, Plastic Wing Nuts, ¼" Rabbet Bit

Woodcraft
800-225-1153
Hinges, Forstner Bit, Shelf Supports, Japanese, Dovetail, & Coping Saws, Bushing Set, Dressing Stick, ¼" Rabbet Bit

The Japan Woodworker
800-537-7820
Japanese Saws

Leichtung Workshops
800-321-6840
Forstner Bit, Universal Guide Bushing Set

Garrett Wade
800-221-2942
Concealed Hinges, Forstner Bit, Japanese, Dovetail, & Coping Saws

Woodworking Unlimited/Shopsmith
800-543-7586
Concealed & Sliding Hinges, Door Bumpers, Shelf Supports, Box Lid Support & Hinges, Dovetail & Coping Saws, Guide Bushing Set, Dressing Stick

Final Details

Entertainment Center

► *Hidden behind the oak frame and panel doors on the left side of this cabinet are a TV and storage space for videotapes, records, and CDs. The smoked glass on the right side conceals electronics gear.*

▼ *Shadow lines add detail to the cabinet. They're created by rounding over the ends of the door rails, and leaving uniform gaps around the doors.*

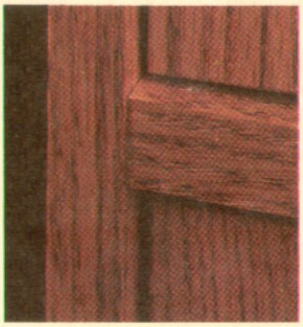

Stationery Box

► *The lid of this box is a beautifully figured piece of cherry. Open or closed, it looks great.*
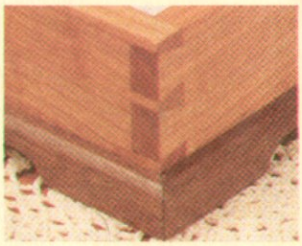
▼ *Hand-cut dovetail joints hold the sides of the box together. The dark end grain of the dovetails blends nicely with the walnut base and lid frame.*